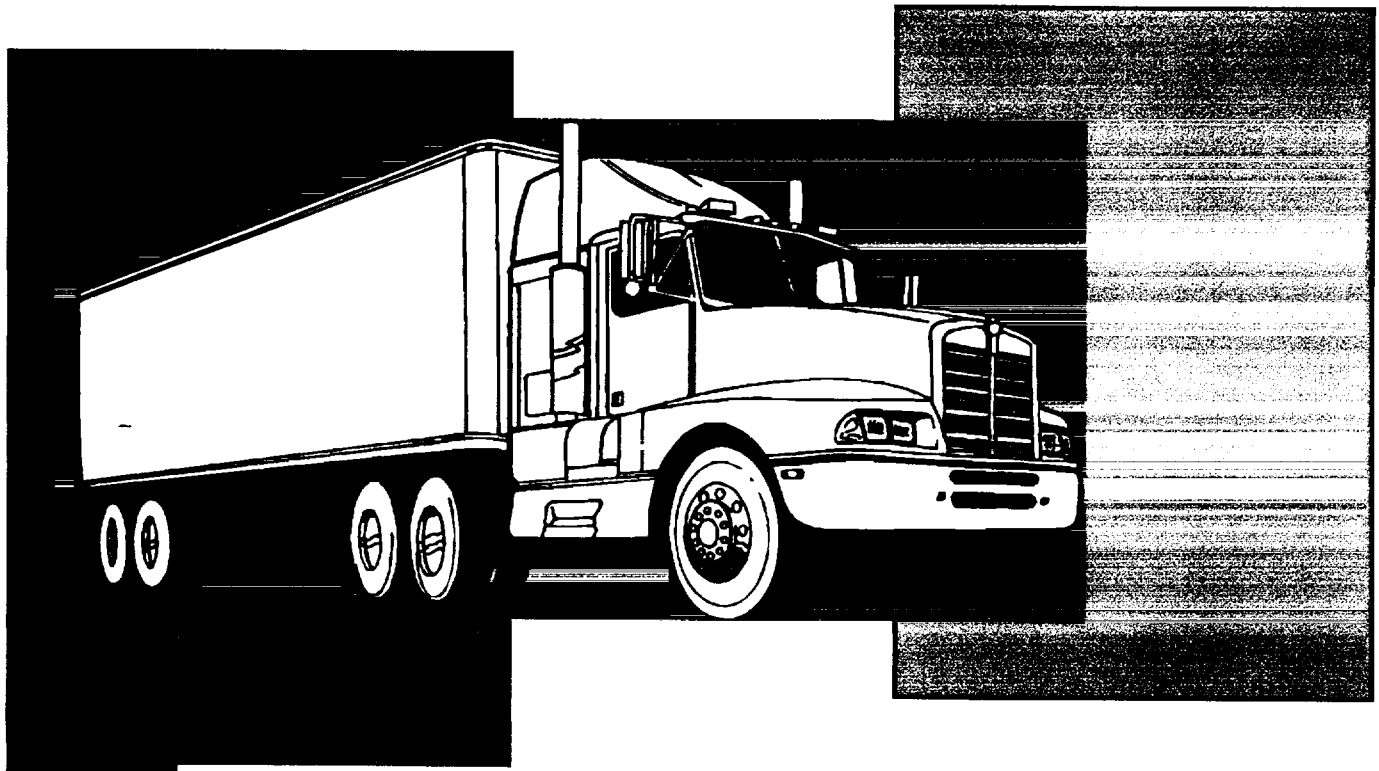

# CROSS-BORDER OPERATING REQUIREMENTS HANDBOOK FOR FOREIGN MOTOR CARRIERS ENTERING THE UNITED STATES

MAY 2002

# TABLE OF CONTENTS

Introduction.....1

Commercial Vehicle Safety Requirements For Operating in the United States.....5
- Operating as a Motor Carrier in the United States.....7
- Mexico-Domiciled Motor Carrier Operations Beyond U.S. Municipalities and Commercial Zones on the U.S.-Mexico Border.....8
  - Process for Obtaining Operating Authority.....8
  - Operating with Provisional Authority.....12
  - Operating with Permanent Authority.....15
- Mexico-Domiciled Motor Carrier Operations within U.S. Municipalities and Commercial Zones on the U.S.-Mexico Border
  - Process for Obtaining a Certificate of Registration.....16
  - Application Process.....16
  - Operating with a Provisional Certificate of Registration.....18
  - Operating with a Permanent Certificate of Registration.....21
- Mark Commercial Motor Vehicles with Motor Carrier Name and USDOT Number.....21
- Obtain Public Liability Insurance to Operate in the United States.....23
- Federal Motor Carrier Safety Regulations.....26
  - General Requirements.....26
  - Qualification of Drivers.....27
  - Commercial Driver's License Standards.....27
  - Controlled Substances & Alcohol Use & Testing Regulations.....28
  - Driving Motor Vehicles.....31
    - Hours of Service.....31
    - Parts & Accessories Necessary for Safe Operations.....34
    - Inspection, Repair and Maintenance .....43
- Federal Hazardous Materials Regulations.....45
- State Motor Carrier Safety and Economic Regulation.....50
- Crash Prevention.....51

State Requirements for Credentials
- Fuel Taxes, Registration Fees, and Other Fees in the U.S. States.....53

Federal Vehicle Weights and Dimensions Requirements.....69

Manufacturing Requirements Applicable to Motor Carriers.....87

Immigration Requirements for Rail, Motor Carrier and Passenger Operations.....111

Customs Requirements.....115

Agricultural Products Trade Requirements.....117

Other Federal Requirements

- U.S. Department of Labor.....123
- Heavy Vehicle Use Tax.....125
- Emissions Requirements.....127
- Americans with Disabilities Act.....127

# INTRODUCTION

The U.S. Department of Transportation has developed this *Cross Border Operating Requirements Handbook for Foreign Motor Carriers Entering the United States* to assist foreign motor carriers, particularly new-entrants, seeking authority to operate in the United States under the North American Free Trade Agreement (NAFTA).

The NAFTA established a timetable for the United States and Mexico to lift restrictions to the provision of motor carrier services. Beginning in June 2001, Mexican citizens or companies were able to own and control a U.S.-domiciled company to transport international cargo between points in the United States. Enterprises domiciled in the United States that are owned or controlled by Mexican citizens or companies are allowed to obtain operating authority to provide bus services between points in the United States. The NAFTA also permits Mexican trucking firms to engage in the cross-border delivery and backhaul of cargo, and allows passenger carriers to provide charter and tour bus services as well as regular route cross-border services. Canadian truck and bus companies have been able to operate the same services in the United States as those outlined above for Mexico under an agreement that preceded the NAFTA. Neither Mexican nor Canadian trucking firms are authorized, however, to move domestic cargo between points in the United States. This restriction is reciprocal for all three NAFTA parties.

All foreign motor carriers operating in the United States are subject to the same federal and state regulations and procedures that apply to U.S. carriers. These include safety regulations, insurance requirements, labor and environmental standards, and payment of all taxes and fees. In addition, foreign motor carriers and drivers must comply with applicable customs and immigration laws and regulations.

The information included in this handbook was prepared by the U.S. Department of Transportation, in cooperation with other federal and state agencies, to assist foreign motor carriers in understanding the requirements for legal operation in the United States. It includes information on the Federal Motor Carrier Safety Regulations, the Federal Motor Vehicle Safety Standards, Hazardous Materials Transportation Safety Regulations, weights and dimensions requirements, application procedures for federal operating authority, customs regulations, immigration requirements for drivers, U.S. Department of Agriculture regulations applicable to imported commodities, applicable labor laws, tax obligations, and other requirements.

This handbook provides important information regarding regulations that affect cross-border operations, which are enforced by several government agencies. Accordingly, the handbook includes the names, addresses, and telephone numbers of individuals who can answer questions and provide more complete information. Also, Internet web sites have been included for most federal and state agencies, where continually updated information on these requirements can be found. An electronic version of the handbook will be continuously available and updated on the U.S. Department of Transportation's website (www.dot.gov/NAFTA) in order to provide the most current operational information and agency contacts. Finally, although this handbook has been developed as a stand-alone document, it is a cooperative effort with Transport Canada and Mexico's Secretariat of Communications and Transportation (SCT), each of which has

developed a similar handbook that is designed to assist foreign motor carriers who wish to conduct legal operations in Canada and Mexico. Those documents can also be accessed electronically through links on the DOT website.

*Important Notice: Motor carriers are responsible for complying with all applicable federal and state requirements, whether or not they are described in this handbook. Throughout this book the term motor carrier refers to commercial carriers of both property and passengers, i.e. truck and bus operators.*

**Additional Information**

The following U.S. Government publications may also be useful to motor carriers operating in the United States:

Importing into the United States, a publication of the U.S. Customs Service, October. 1994 (Customs Publication No. 504A)

Available from:
Government Printing Office
Superintendent of Documents
Mail Stop SSOP
Washington, D.C. 20402-9328
GPO Document No. ISBN 0-16-045392-5

DOT-Tabla 10S, Guia de Marcaci6n, Etiquetas y Carteles para-Materiales Peligrosos, a guide to hazardous materials marking, labeling, and placarding, published by the Research and Special Programs Administration, DOT, February 1994

Available from:
Research and Special Programs Administration
OHMIT/DHM-51
U.S. Department of Transportation
400 Seventh Street, S.W.
Washington, D.C. 20590-0001

Guide for Brokers, Forwarding Agents, Freight Forwarders, and Warehousers, a publication of the Research and Special Programs Administration, DOT

Available from:
Research and Special Programs Administration (DHM-50)
U.S. Department of Transportation
400 Seventh Street, S.W.
Washington, D.C. 20590-0001

How to Use the Hazardous Materials Regulations 1995 Edition, published by the Research and Special Programs Administration, DOT, May 1995

Available from:
Research and Special Programs Administration (DHM-50)
U.S. Department of Transportation
400 Seventh Street, S.W.
Washington, D.C. 20590-0001

1993 Guia de Respuesta en Caso de Emergencia (P 5800.65) hazardous materials emergency response guide in Spanish, a publication of the Research and Special Programs Administration, DOT

Available from:
Research and Special Programs Administration (DHM-50)
U.S. Department of Transportation
400 Seventh Street, S.W.
Washington, D.C. 20590-0001

Handy Reference Guide to the Fair Labor Standards Act
available on the Internet at http://www.dol.gov/dol/esa/public/regs/compliance/whd/hrg.htm or from the Office of Enforcement Policy, Wage and Hour Division, U.S. Department of Labor, Rm. S-3510, 200 Constitution Ave. NW, Washington, D.C., 20210.

# COMMERCIAL VEHICLE SAFETY REQUIREMENTS FOR OPERATING IN THE UNITED STATES

## Federal Motor Carrier Safety Administration Reference Guide

Although we make every effort to assure that the information we provide is complete and accurate, it is not intended to take the place of published agency regulations. This document only paraphrases the Federal Motor Carrier Safety Regulations published in Title 49 of the U.S. Code of Federal Regulations. The contents may not be relied upon as a substitute for the official text. The regulations issued by the U.S. Department of Transportation and its Operating Administrations are published in the Federal Register and compiled in the U.S. Code of Federal Regulations (CFR). Copies of appropriate volumes of the CFR in book format may be purchased from the Superintendent of Documents, U.S. Government Printing Office (GPO Web site **www.access.gpo.gov**), or examined at many libraries.

**FMCSA** The United States Department of Transportation, Federal Motor Carrier Safety Administration's (FMCSA) mission is to prevent commercial motor vehicle-related crashes. FMCSA activities contribute to ensuring safety in motor carrier operations through strong enforcement of the Federal Motor Carrier Safety Regulations (FMCSRs), targeting high-risk carriers and commercial motor vehicle drivers for enforcement; improving safety information systems and commercial motor vehicle technologies; strengthening commercial motor vehicle equipment and operating standards; and increasing driver safety awareness. To accomplish these activities, the Administration works with Federal, State, and local enforcement agencies, the motor carrier industry, labor and safety interest groups, and others.

**Locations** FMCSA headquarters is located at 400 Seventh Street S.W., Washington, D.C. 20590. FMCSA also has offices in each of the U.S. States as well as four strategically located Service Centers in Atlanta, GA, Baltimore, MD, Olympia Fields, IL, and San Francisco, CA.

**Websites** For more information about the FMCSA, locations of each of our Service Centers and State offices, the Federal Motor Carrier Safety Regulations, our safety programs which help carriers and drivers operate safely on our Nation's highways and the results of research and analysis regarding commercial vehicle safety in the U.S., visit our Website at **www.fmcsa.dot.gov** or in Spanish at **www.fmcsa.dot.gov/spanish**

**FMCSRs** For a thorough explanation of the Federal requirements for operating a commercial vehicle safely in the U.S., refer to the Federal Motor Carrier Safety Regulations (FMCSRs), 49 CFR Parts 200-399 and the FMCSA Web site at **www.fmcsa.dot.gov/rulesregs/FMCSRhome.htm**

**HMRs** For a thorough explanation of the Federal requirements for the transportation of hazardous materials refer to the HM Regulations, 49 CFR Parts 100-185 and the U.S. DOT Web site at **www.text-trieve.com/dotrspa/dotbody.asp** For a summary of the requirements, see **www.fmcsa.dot.gov/safetyprogs/hm.htm**

**Copies** Both the FMCSRs and HMRs can be ordered from the Superintendent of Documents, U.S. Government Printing Office, Washington, D.C. 20402, telephone, D.C. area (202) 512-1800; Toll-Free (866) 512-1800 or through the web site http://bookstore.gpo.gov . The Federal Motor Carrier Safety Administration does not stock or supply manuals and forms, such as the FMCSRs, "Accident Countermeasure" Manual, Medical Examiner's Certificate, Driver's Qualification File Forms, Driver's Daily Log Books, Hazardous Materials placards, Hazardous Materials labels, etc. These may be obtained from printing firms, State motor carrier associations, or other sources. The FMCSA Web site includes "A Motor Carrier's Guide to Improving Highway Safety," which contains a list of some of these suppliers. Visit **www.fmcsa.dot.gov/factsfigs/eta/forms.html**

**FMVSS** The National Highway Traffic Safety Administration's (NHTSA) mission is to save lives, prevent injuries and reduce traffic related health care and other economic costs. The Agency develops, promotes, and implements effective educational, engineering, and enforcement programs to end preventable tragedies and reduce economic costs associated with vehicle use and highway travel. The NHTSA establishes vehicle manufacturing regulations called the Federal Motor Vehicle Safety Standards (FMVSS). When the process of vehicle manufacturing is completed, a motor vehicle must comply with the FMVSS in order for them to be legally sold in the U.S. In addition, all motor vehicles operated in the U.S. must comply with the FMVSS. The FMVSS are found in Title 49 Code of Federal Regulations, Part 571. For more information, visit the GPO Web site at **www.access.gpo.gov.**

**Hotline** In our continuing effort to improve highway safety, the FMCSA provides a toll-free number 1-888-DOT-SAFT (368-7238) to report actual or potential violations of the FMCSRs. In addition, comments, concerns and complaints can be submitted in writing and mailed to the Federal Motor Carrier Safety Administration, 400 Seventh Street, S.W., Washington, D.C. 20590. These written complaints may also be faxed to (202) 366-7298.

# Operating as a Motor Carrier in the United States

**Process for obtaining Operating Authority and/or Certificate of Registration to operate in and /or beyond the Commercial Zone in the U.S.**

Note: The process described here applies to Mexico-domiciled carriers under Federal Motor Carrier Safety Administration (FMCSA) rules effective on May 3, 2002 (for carriers operating beyond the commercial zones) and on April 18, 2002 (for carriers operating only within the commercial zones). Currently Canadian carriers seeking U.S. operating authority must submit a Form OP-1 (OP-1(P) for passenger carriers) application for motor carrier authority, have on file with FMCSA a current BOC-3 - Agent of process, and have on file proof of insurance issued by an authorized insurance carrier. However, in regulations released for public comment on May 13, 2002, the FMCSA intends to require all new U.S. and Canadian carriers to undergo a process for obtaining *permanent* authority similar to the process now in effect for Mexican carriers operating within the commercial zones.

- ✓ Complete Application Form for type of authority requested
  - OP-1 (MX) Beyond the Commercial Zone
  - OP-2 Commercial Zone Only
- ✓ Attend a Safety Compliance Seminar (optional)
- ✓ Complete Motor Carrier Identification Report (Form MCS-150)
- ✓ Designate Process Agent (Form BOC-3)
- ✓ Pay Filing Fee
- ✓ Show Proof of Insurance **www.fmcsa.dot.gov/factsfigs/eta/TOC.html**
- ✓ Pass Safety Audit
  - OP-1 (MX) Beyond the Commercial Zone before Provisional Authority granted
  - OP-2 Commercial Zone Only Within 18 months after Provisional Certificate of Registration issued
- ✓ Have insurance company file proof of insurance with FMCSA [OP-1 (MX) only]
- ✓ Mark your commercial motor vehicles with the legal name or DBA name used on the Form MCS-150, and number the USDOT assigned to you.
- ✓ Pass Compliance Review before 18 months of Provisional Authority expires

- ✓ Comply with Federal Motor Carrier Safety Regulations (FMCSRs)
  www.fmcsa.dot.gov/rulesregs/FMCSRshome.htm.

- ✓ Comply with Hazardous Material Safety Regulations (HMRs)
  www.fmcsa.dot.gov/rulesregs/FMCSRs/regs/397menu.htm
  www.text-trieve.com/dotrspa/dotbody.asp

- ✓ Comply with all State Motor Carrier Safety and Economic Regulations
  www.fmcsa.dot.gov/links.htm#STGOV

## Mexico-Domiciled Motor Carrier Operations Beyond U.S. Municipalities and Commercial Zones on the U.S.-Mexico Border

## Process for Obtaining Operating Authority

This process for obtaining operating authority applies to any Mexico-domiciled carrier of property or passengers seeking authority to operate between Mexico and points in the United States beyond the border commercial zones and is comprised of three sub-processes - initial application, operations under provisional authority, and operations under permanent authority. Each of these is described in more detail below.

### Application Process

The application process represents the first phase in a carrier's efforts to obtain U.S. operating authority. To successfully complete the application process a carrier must accomplish two activities-1) correctly complete and file the OP-1 (MX) application package, accompanied by an application fee and 2) pass a safety audit.

A. Completing and Filing an OP-1 (MX) Application -- The first step in the application process is to thoroughly and accurately complete the application forms. Applications containing missing or incomplete information will delay processing until the necessary information is provided. The following provides an overview of the steps involved in obtaining, completing and filing an OP-1 (MX) application.

1. Obtaining a Copy of the OP-1 (MX) Application Package -- Mexico-domiciled carriers can obtain a copy of the application package (1) through the mail by calling FMCSA's Information Line (001-800-832-5660 from Mexico or 1-800-832-5660 from the U.S. or Canada) or any FMCSA Division office and requesting the OP-1 (MX) application package or (2) through the FMCSA web site on the Internet at www.fmcsa.dot.gov.

2. Attending a 1-Day Seminar on U.S. Safety Requirements (Optional) - FMCSA has developed a 1-day seminar on U.S. safety requirements for Mexico-domiciled carriers seeking U.S. operating authority. The seminar provides an overview of the U.S. safety regulations and process for obtaining U.S. operating authority. The information provided at the seminar will be

valuable to the carrier in completing the application and preparing for the upcoming Safety Audit. Although participation in the seminar is not mandatory, carriers are strongly encouraged to attend. Information about the time and location of future seminars will be provided to the Mexican trucking associations, the Secretaría de Comunicaciones y Transportes, and will be distributed to drivers at major border crossings.

3. Completing the Application -- The application package is printed in English and Spanish, but the carrier's responses must be written in English. It is very important that the carrier provides all required information and completes the application in its entirety before mailing it back. Applications with missing information will be returned to the carrier. Information provided on the application will be checked against a variety of U.S. and Mexican databases to ensure that the carrier is eligible to apply for authority.

4. Filing the Application -- All applicants must submit the following documents and fee to FMCSA:

a. OP-1 (MX) Application: An original and one copy of a completed Form OP-1 (MX), Application to Register Mexican Carriers for Motor Carrier Authority to Operate Beyond U.S. Municipalities and Commercial Zones on the U.S.-Mexico Border, with all necessary attachments and statements.

b. Motor Carrier Identification Report (Form MCS-150): A completed and signed Form MCS-150, Motor Carrier Identification Report. The MCS-150 provides basic information about the carrier's operation necessary to maintain FMCSA's carrier census database.

c. Designation of a Process Agent (Form BOC-3): A carrier must provide a signed and dated Form BOC-3, Designation of Process Agent, or use a process service agent who will electronically file the BOC-3 within 90 days. The BOC-3 form must show the street addresses for the person(s) designated as the agent(s) for serving notices of enforcement action. A process agent must be designated in each state in which the applicant may operate. The applicant may not begin operations unless the Form BOC-3 has been filed with the FMCSA.

d. Filing Fee: Except for those carriers that have already paid the fee, a filing fee of $300 for each type of registration requested (e.g., contract, common or household goods) payable in U.S. dollars on a U.S. Bank to the FMCSA by means of check, money order or credit card must accompany the application.

The completed application, fee and above-mentioned documents should be sent to either FMCSA's Trans-border Office (if paying with a credit card) or to FMCSA's Lockbox (if paying by check or money order). The addresses are as follows:

**FMCSA Trans-Border Office**

FMCSA Trans-border Office

P.O. Box 530870

San Diego, CA 92153

FMCSA Lockbox Addresses

**FOR REGULAR DELIVERY:**

Federal Motor Carrier Safety Administration

P. O. Box 100147

Atlanta, GA 30384-0147

**FOR EXPRESS MAIL ONLY:**

Bank of America, Lockbox 100147

6000 Feldwood Road

3rd Floor East

College Park, GA 30349

5. Providing Proof of Insurance - The carrier is not required to submit proof of insurance with the application. However, the carrier must present evidence of insurance coverage as part of the pre-authority Safety Audit. Also, if the carrier passes the audit, the carrier's insurance company must file the appropriate insurance forms (Form BMC-91 or BMC-91X for bodily injury and property damage; Form BMC-34 for cargo liability) with FMCSA within 90 days after the date that notice of the carrier's application is published in the DOT/FMCSA Register.

B. Passing A Safety Audit -- The second major element of the application process is the pre-authority Safety Audit. The Safety Audit consists of a review of the carrier's safety data, a review of requested motor carrier documents, vehicle inspections, and an interview session with the motor carrier's safety official by a trained safety auditor. The following steps describe this aspect of the application process.

1. Preparing for the Audit -- In addition to completing the OP-1 (MX) application package, Mexico-domiciled carriers seeking U.S. operating must also receive and pass an FMCSA Safety Audit prior to receiving provisional operating authority. FMCSA recommends that a Mexican carrier do the following things in preparation for the audit:

.- Obtain a copy of FMCSA's Educational and Technical Assistance (ETA) Package through the Internet at www.fmcsa.dot.gov/factsfigs/eta/index.html (English) or www.fmcsa.dot.gov/spanish/eta/ETA(SP) index.html (Spanish)

- Attend the 1-day Mexican Carrier Seminar

✓ Ensure all vehicles intended for operations beyond the U.S. commercial zones have been inspected by an inspector certified by the Commercial Vehicle Safety Alliance (CVSA) and have a decal affixed indicating the inspection has been passed

✓ - Become familiar with the Federal Motor Carrier Safety Regulations (FMCSRs) and Hazardous Materials Regulations (HMRs) (if appropriate). These regulations are available through the Internet at www.fmcsa.dot.gov/rulesregs/fmcsrhome.htm

2. Scheduling the Audit -- The FMCSA Division Office assigned to the carrier's business location will contact the carrier to schedule a mutually agreeable time and place for conducting the audit. FMCSA will also contact Mexico's Secretariat for Communications and Transportation (SCT) making them aware of the scheduled safety audit. Representatives of SCT may choose to participate in the audit. FMCSA is required to conduct at least 50% of all safety audits on-site at the carrier's place of business. The remaining 50% may be conducted at sites other than the carrier's place of business depending on variables such as the size of the carrier, commodity hauled, and location of the carrier's place of business. A letter will be sent to the carrier documenting when and where the safety audit will be held.

3. Participating in the Audit -- The objective of the safety audit is to both educate the carrier on compliance with the FMCSRs and HMRs and to determine areas where the carrier might be deficient in terms of compliance. The safety auditor will use a series of questions regarding the carrier's safety management practices and safety performance to ensure that all applicable acute and critical areas of the FMCSRs and HMRs are addressed. Areas covered include the qualification of drivers, driving a motor vehicle, hours of service, inspection, repair, and maintenance, transporting and marking hazardous materials, controlled substance and alcohol use and testing, commercial driver's license standards, and financial responsibility. At the end of the audit, the carrier will receive a report listing any deficiencies that may have been found along with recommendations for correcting those deficiencies. If the carrier passes the pre-authority safety audit and FMCSA approves its application, the Agency will publish a summary of the application as a preliminary grant of authority in the DOT/FMCSA Register. FMCSA will notify the carrier of the results of the audit (Pass or Fail) within 45 days after completion of the audit.

4. Passing the Audit -- Carriers that pass the audit will receive (1) a letter stating that they have passed the audit and (2) a reminder that the carrier is required to have a Form BOC-3 (Designation of Agents) and insurance forms on file with the FMCSA before operating authority can be issued.

Once the Form BOC-3 and the insurance forms have been filed, the FMCSA will send the carrier a package of materials that will contain: a) a certificate authorizing the carrier to operate in the United States for a period of 18 months and b) a USDOT number.

The USDOT number must be displayed on both sides of any vehicle intended for use in the United States before a carrier can operate in the United States. Also, a current DOT Form MCS-90 and evidence of continuing insurance coverage must be carried with each of the carrier's vehicles when it crosses the border.

5. Failing the Audit -- Carriers that fail the audit will receive a letter from the FMCSA informing them that they failed the safety audit, the reason that the audit was failed, and instructions for re-applying.

**Operating with Provisional Authority**

FMCSA has implemented a safety monitoring system and compliance initiative to help determine whether Mexico-domiciled carriers conducting operations anywhere in the United States comply with applicable safety regulations and conduct safe operations. The two major elements of this safety monitoring system are 1) compliance monitoring via a Compliance Review and 2) roadside performance monitoring. Each of these elements is discussed below.

A. FMCSA Compliance Review -- All Mexico-domiciled carriers seeking permanent U.S. operating authority to operate beyond the commercial zones must undergo an FMCSA-conducted Compliance Review (CR). A CR is a process whereby a federal safety investigator examines a carrier's trucking operation to determine compliance with the FMCSRs and HMRs (if applicable). It focuses on not only the carrier's safety management controls, but also the carrier's operational performance and regulatory compliance.

1. Participating in a Compliance Review -- At some point within the 18-month provisional operating period, FMCSA is required to conduct a Compliance Review (CR) consistent with federal safety fitness evaluation procedures. As a result of the CR, the carrier will be issued a safety rating of satisfactory, conditional or unsatisfactory. Carriers must receive a satisfactory rating in order to qualify for permanent operating authority. Enforcement action in the form of fines, suspension or revocation of operating authority may result from a CR.

2. Scheduling the Compliance Review -- FMCSA's Division Office will call the carrier to schedule a mutually agreeable time and location for conducting the compliance review. FMCSA will also contact Mexico's SCT making them aware of the scheduled compliance review. Representatives of SCT may choose to participate in the review. The call will be followed up with a letter to the carrier documenting when and where the compliance review will be held.

3. Receiving a Satisfactory Rating -- If the CR reveals that the carrier is in compliance with the FMCSRs and HMRs (if appropriate) and has basic safety management controls in place that are functioning adequately, the carrier will receive a satisfactory safety rating. The Mexican carrier's

provisional operating authority will remain in place and its performance will remain closely monitored by the FMCSA until the end of the 18-month period.

4. Receiving an Unsatisfactory or Conditional Rating -- If a carrier receives an unsatisfactory rating as a result of a CR due to severe safety problems and/or non-compliance with the FMCSRs and HMRs (if appropriate), FMCSA will notify the carrier that it is required to take action to improve its safety practices if it wishes to continue to operate in the United States. The carrier's operating authority would be suspended effective 15 days after the service date of the notice and an Operations Out of Service Order would be imposed, prohibiting it from operating any motor vehicle in the United States, unless the carrier demonstrates, within 10 days of the service date of the notice, that the compliance review contains material error. Failure to take the necessary corrective action within 45 days of the service date of an unsatisfactory rating would result in the revocation of a carrier's provisional operating authority. A follow-up review would be conducted to ensure that all corrective actions have been taken.

Carriers receiving a conditional rating would have their provisional operating authority revoked and an Operations Out of Service Order imposed if the necessary corrective action is not taken within 45 days after the service date of the rating. A follow-up review would be conducted to ensure that all corrective actions have been taken.

B. Roadside Performance Monitoring -- During the 18-month period following issuance of provisional operating authority, the over-the-road safety performance of Mexico-domiciled carriers will be tracked and assessed though a comprehensive roadside performance monitoring system. The major aspects of that system are presented below.

1. Checking Mexican Commercial Motor Vehicle (CMV) Drivers Licenses -- Federal and State inspectors will be required to electronically verify the status and validity of the Licencia Federal of Mexican commercial drivers for the following commercial vehicles:

a. Vehicles carrying placardable quantities of hazardous materials;

b. Vehicles undergoing a Level 1 inspection; and

c. Randomly selected Mexican commercial vehicles (at least

50% of all Mexican vehicles operating beyond the commercial zones)

2. Inspecting All CMVs of Mexico-Domiciled Carriers Without Commercial Vehicle Safety Alliance (CVSA) Decals -- All vehicles of Mexico-domiciled carriers that do not display a currently valid CVSA decal will be inspected by certified inspectors, including examination of the driver, vehicle exterior and vehicle under-carriage for a period of 4.5 years (1.5 years while operating with provisional authority and 3 years while operating with permanent authority.) In addition, a certified CVSA inspector may inspect any vehicle, at any time, either at the border or roadside, regardless of whether the vehicle has a CVSA decal.

3. Using Expedited Action Letters to Alert Carriers to Safety Problems -- Mexico-domiciled motor carriers that commit certain violations discovered as part of a roadside inspection or other

means may be subject to an expedited safety audit or compliance review (if the carrier has not already had one) or issued an expedited action letter identifying the violations and directing the carrier to submit a written response demonstrating corrective action. The specific violations that may generate an expedited action letter include:

- Using drivers not possessing, or operating without a valid Commercial Driver's License (CDL) or Licencia Federal de Conductor (LF);

- Operating vehicles that have been placed out-of-service (OOS) for CVSA OOS violations without making required repairs;

- Involvement in, due to carrier act or omission, a hazardous materials (HM) incident within the United States involving highway route controlled quantity of certain HM;

- Involvement in, due to carrier act or omission, two or more hazardous materials incidents within the United States;

- Using a driver who tests positive for drugs or alcohol or who refuses to submit to required drug or alcohol tests;

- Operating within the United States a motor vehicle that is not insured as required by 49 CFR Part 387;

- Having a driver or vehicle OOS rate of at least 50% based upon three inspections within a consecutive 90-day period.

Failure to respond to an agency request for a written response demonstrating corrective action within 30 days will result in suspension of the carrier's provisional operating authority until the required showing of corrective action is submitted to the FMCSA. Expedited CRs and the use of expedited action letters will only apply during the 18-month monitoring period.

In addition, Mexico-domiciled carriers identified as "at risk" by FMCSA's Safety Status Measurement System (SafeStat) performance system may receive a compliance review regardless of whether they are operating with provisional authority. SafeStat is an automated analysis system developed for the FMCSA. The system combines current and historical safety performance data to measure the relative safety fitness of interstate commercial motor carriers. SafeStat enables the FMCSA to quantify and monitor the safety status of motor carriers and guides the deployment of resources to focus on carriers posing the greatest safety risk. Access to SafeStat results can be found on the Internet at the Analysis and Information website (www.ai.volpe.dot.gov) or by telephoning 412 395-4816.

## Operating With Permanent Authority

Mexico-domiciled carriers that demonstrate acceptable levels of safety performance and receive a satisfactory rating from the CR will be issued permanent operating authority at the end of the 18-month provisional period. FMCSA will send written notification to the carrier indicating that the status of its operating authority has been changed from provisional to permanent.

Once Mexico-domiciled carriers have been issued permanent operating authority, they will fall under the same safety requirements and operational procedures applied to U.S. and Canadian carriers, with one exception. For a period of three years, Mexico-domiciled carriers that have been granted permanent operating authority will still be required to ensure that all their vehicles operating beyond the border zone display a currently valid CVSA decal. Decals are valid for 90 days.

# Mexico-Domiciled Motor Carrier Operations within U.S. Municipalities and Commercial Zones on the U.S.-Mexico Border

## Process for Obtaining a Certificate of Registration

The process for obtaining a Certificate of Registration applies to Mexico-domiciled motor carriers who wish to register to operate only in the municipalities in the United States on the U.S.-Mexico border or within the commercial zones of such municipalities.

It also applies to Mexico-domiciled motor carriers that currently hold a Certificate of Registration from the former Interstate Commerce Commission, the Federal Highway Administration, the Office of Motor Carrier Safety or the Federal Motor Carrier Safety Administration (FMCSA).

The process for obtaining a Certificate of Registration is comprised of three sub-processes: 1) the application process, 2) operations under a provisional Certificate of Registration, and 3) operations under a permanent Certificate of Registration. Each of these is described in more detail below.

## Application Process

The application process represents the first phase in a carrier's efforts to obtain a Certificate of Registration to operate in border cities and their commercial zones. To successfully complete the application process, a carrier must correctly complete and file the OP-2 application package, accompanied by an application fee. Mexico-domiciled carriers that currently hold Certificates of Registration for commercial zone operation must re-apply with the FMCSA by October 20, 2003 in order to continue these operations. Carriers re-applying for a permanent Certificate of Registration will not be required to pay the $300 application fee.

The following are the steps in the application process:

1. Obtaining a Copy of the OP-2 Application Package -- Mexico-domiciled carriers can obtain a copy of the application package (1) through the mail by calling FMCSA's Information Line (001-800-832-5660 from Mexico or 1-800-832-5660 from the U.S. or Canada) and requesting the OP-2 application package or (2) through the FMCSA web site on the Internet at www.fmcsa.dot.gov.

2. Attending a 1-Day Seminar on U.S. Safety Requirements (Optional) - FMCSA has developed a 1-day seminar on United States safety requirements for Mexico-domiciled carriers seeking U.S. operating authority or a Certificate of Registration. The seminar provides an overview of the U.S. safety regulations and process for obtaining U.S. operating authority or Certificates of Registration. The information provided at the seminar will be valuable to the carrier in completing the application form and preparing for the upcoming safety audit. Although participation in the seminar is not mandatory, carriers are strongly encouraged to attend.

Information about the time and location of future seminars will be provided to the Mexican trucking associations, and the Secretaría de Comunicaciones y Transportes, and will be distributed to drivers at major border crossings.

3. Completing the Application -- The application package is printed in English and Spanish, but the carrier's responses must be written in English. It is very important that the carrier provides all required information and completes the application in its entirety before mailing it back. Applications with missing information or fees will be returned to the carrier. Information provided on the application will be checked against a variety of U.S. and Mexican databases to ensure that the carrier is eligible for a Certificate of Registration.

4. Filing the Application -- All applicants must submit the following documents and fee to FMCSA:

a. OP-2 Application: An original and one copy of a completed Form OP-2 Application for Mexican Certificate of Registration for Foreign Motor Carriers and Foreign Motor Private Carriers Under 49 U.S.C. 13902, with all necessary attachments and statements.

b. Motor Carrier Identification Report (Form MCS-150): A completed and signed Form MCS-150, Motor Carrier Identification Report. The MCS-150 provides basic information about the carrier's operation necessary to maintain FMCSA's carrier census database.

c. Designation of Process Agent (Form BOC-3): A carrier must provide a signed and dated Form BOC-3, Designation of Process Agent, or use a process service agent who will electronically file the Form BOC-3 within 90 days. The BOC-3 form must show the street addresses for the person(s) designated as the agent(s) for serving notices of enforcement action. A process agent must be designated in each state in which the applicant may operate. The applicant may not begin operations unless the Form BOC-3 has been filed with the FMCSA.

d. Filing Fee: Except for those carriers that have already paid the fee, a filing fee of $300 for each type of registration requested (e.g., contract, common or household goods) payable in U.S. dollars on a U.S. bank to the FMCSA by means of check, money order or credit card must accompany the application.

The completed application, fee and above-mentioned documents should be sent to either FMCSA's Trans-border Office (if paying with a credit card) or to FMCSA's Lockbox (if paying by check or money order). The addresses are as follows:

FMCSA Trans-border Office

P.O. Box 530870

San Diego, CA 92153

## FMCSA LOCKBOX ADDRESSES

**FOR REGULAR DELIVERY:**

Federal Motor Carrier Safety Administration

P. O. Box 100147

Atlanta, GA 30384-0147

**FOR EXPRESS MAIL ONLY:**

Bank of America, Lockbox 100147

6000 Feldwood Road

3rd Floor East

College Park, GA 30349

5. Providing Proof of Insurance - The applicant does not have to submit evidence of insurance with the application. However, if the applicant is issued a Certificate of Registration, the following must be on each of its vehicles when crossing the border:

- a current DOT Form MCS-90, and
- evidence of insurance. The evidence of insurance must show either trip insurance coverage (24 hours or more coverage), or evidence of continuing insurance.

6. Approval of the OP-2 Application - Applicants that have fully met the requirements for completing their OP-2 applications will be notified in writing by FMCSA that their application has been approved. The carrier will also receive: (1) a provisional Certificate of Registration that allows the carrier to operate in the commercial zones for a period of 18 months, and (2) a USDOT number.

7. Displaying the USDOT Number --The USDOT number must be displayed on both sides of any vehicle intended for use in the U.S. before operations can begin.

### Operating With A Provisional Certificate of Registration

FMCSA has implemented a safety monitoring system and compliance initiative to help determine whether Mexico-domiciled carriers conducting operations between points in Mexico and the border commercial zones comply with applicable safety regulations and conduct safe operations. The two main components of this safety monitoring system are: 1) a safety

assessment via a safety audit (usually on site), and 2) safety performance monitoring on U.S. highways via more frequent roadside inspections. Each of these elements is discussed below.

A. FMCSA Safety Audit -- All Mexico-domiciled carriers seeking a permanent Certificate of Registration to operate in the border commercial zones must undergo and pass an FMCSA-conducted safety audit. The safety audit consists of a review of the carrier's safety data, a review of requested motor carrier documents, and an interview session with the motor carrier's safety official by a trained safety auditor. The following steps describe this aspect of the application process.

1. Preparing for the Audit -- Mexico-domiciled carriers seeking a permanent Certificate of Registration to operate in the border commercial zones must receive and pass an FMCSA Safety Audit within the 18-month provisional period. FMCSA recommends that a Mexico-domiciled carrier do the following things to prepare for the audit:

- Obtain a copy of FMCSA's Educational and Technical Assistance (ETA) Package through the Internet at www.fmcsa.dot.gov/factsfigs/eta/index.html (English) or www.fmcsa.dot.gov/spanish/eta/ETA(SP) index.html (Spanish).

- Attend the 1-day Mexican Carrier Seminar

- Become familiar with the Federal Motor Carrier Safety Regulations (FMCSRs) and Hazardous Materials Regulations (HMRs) (if appropriate). These regulations are available through the Internet at www.fmcsa.dot.gov/rulesregs/fmcsrhome.htm

2. Scheduling the Audit -- The FMCSA Division Office assigned to the carrier's business location will contact the carrier to schedule a mutually agreeable time and place for conducting the audit. . FMCSA will also contact Mexico's (SCT) making them aware of the scheduled compliance review. Representatives of SCT may choose to participate in the review. FMCSA may conduct the audit on site at the carrier's place of business or at another mutually agreeable location. A letter will be sent to the carrier documenting when and where the safety audit will be held.

3. Participating in the Audit -- The objective of the safety audit is to both educate the carrier on compliance with the FMCSRs and HMRs and to determine areas where the carrier might be deficient in terms of compliance. The safety auditor will use a series of questions regarding the carrier's safety management practices and safety performance to ensure that all applicable acute and critical areas of the FMCSRs and HMRs are addressed. Areas covered include the qualification of drivers, driving a motor vehicle, hours of service, inspection, repair, and maintenance, transporting and marking hazardous materials, controlled substance and alcohol use and testing, commercial driver's license standards, and financial responsibility. At the end of the audit, the carrier will receive a report listing any deficiencies that may have been found along with recommendations for correcting those deficiencies. FMCSA will notify the carrier of the results of the audit (Pass or Fail) within 45 days after completion of the audit.

4. Passing the Audit -- If the safety audit reveals that the carrier is in compliance with the FMCSRs and has basic safety management controls in place that are functioning adequately, the carrier will receive a passing score. The Mexico-domiciled carrier's provisional Certificate of Registration will remain in place and its performance will be closely monitored by the FMCSA until the end of the 18-month period.

5. Failing the Audit -- If a carrier fails the audit due to severe safety problems, the lack of adequate safety management controls, and/or non-compliance with the FMCSRs, FMCSA will notify the carrier that it will suspend its registration effective 15 days after the service date of the notice unless the carrier demonstrates, within 10 days, that the safety audit contained material error. If the carrier fails to show a material error in the safety audit, FMCSA will then issue an Order suspending the carrier's provisional Certificate of Registration and notify the carrier that unless it presents evidence of necessary corrective action within 30 days from the service date of the Order, the carrier's provisional Certificate of Registration would be revoked.

B. Roadside Performance Monitoring -- During the 18-month period following issuance of a provisional Certificate of Registration, the FMCSA will track and assess the safety performance of Mexico-domiciled carriers on U.S. highways through a comprehensive roadside performance monitoring system. The major aspects of that system are presented below.

1. Using Expedited Action Letters to Alert Carriers to Safety Problems -- Mexico-domiciled motor carriers that commit certain violations discovered as part of roadside inspections or other means may be subject to an expedited safety audit (if the carrier has not already had one), a compliance review or issued an expedited action letter identifying the violations and directing the carrier to submit a written response demonstrating corrective action. The specific violations that may generate an expedited action letter include:

- Using drivers not possessing, or operating without a valid Commercial Driver's License (CDL) or Licencia Federal de Conductor (LF);

- Operating vehicles that have been placed out-of-service (OOS) for Commercial Vehicle Safety Alliance (CVSA) OOS violations without making required repairs;

- Involvement in, due to carrier act or omission, a hazardous materials (HM) incident within the U.S. involving highway route controlled quantity of certain HM;

- Involvement in, due to carrier act or omission, two or more hazardous materials incidents within the U.S.;

- Using a driver who tests positive for drugs or alcohol or who refuses to submit to required drug or alcohol tests;

- Operating within the U.S. a motor vehicle that is not insured as required by 49 CFR Part 387;

- Having a driver or vehicle OOS rate of at least 50% based upon three inspections within a consecutive 90-day period.

Failure to respond to an agency request for a written response demonstrating corrective action within 30 days will result in suspension of the carrier's provisional Certificate of Registration until the required showing of corrective action is submitted to the FMCSA. Expedited safety audits and the use of expedited action letters will only apply during the 18-month monitoring period.

### Operating With A Permanent Certificate of Registration

Mexico-domiciled carriers that demonstrate acceptable levels of safety performance and pass the safety audit will be notified that their Certificate of Registration has become permanent at the end of the 18-month provisional period. Once Mexico-domiciled carriers have been issued permanent Certificates of Registration, they will fall under the same safety requirements and operational procedures applied to U.S. and Canadian carriers.

## Mark Commercial Motor Vehicles with Motor Carrier Name and USDOT Number

Every commercial vehicle must be marked on both sides of the vehicle with the motor carrier's name and USDOT number. The following are examples of USDOT numbers:

| | |
|---|---|
| U.S. & Canadian carriers | 1234567 |
| Mexico-domiciled U.S. commercial zone carriers | 1234567Z |
| Mexico-domiciled beyond-the-U.S.-commercial-zone carriers | 1234567X |

All commercial motor vehicles (as defined in 49 CFR Section 390.5) **added to a motor carrier's fleet after July 3, 2000** and operated in interstate and foreign commerce, must meet the requirements mentioned below before being used on public roads in the U.S.

- **The motor carrier's legal name or the trade name as listed on the Motor Carrier Identification Report (Form MCS-150) and submitted to the U.S. DOT.**

- **The motor carrier's identification number issued by the FMCSA, preceded by the letters "USDOT."**

**Carlos Trucking, Inc.**
**USDOT 123456**

**Note:** If the name of any person other than the operating carrier appears on the commercial motor vehicle, the legal name or single trade name of the operating motor carrier, as listed on the Form MCS-150, must be displayed on the vehicle. The name and USDOT number for the operating carrier must be preceded by the words "Operated by."

**Don Amigo Van Lines**
**Operated By:**
**Carlos Trucking**
**USDOT: 123456**

**Size, Shape, Location and Color of Marking:**

**The marking must:**

- appear on both sides of the self-propelled CMV vehicle
- be in letters that contrast sharply in color with the background on which the letters are placed;
- be readily legible, during daylight hours, from a distance of 50 feet (15.24 meters) while the commercial motor vehicle is stationary; and
- be kept and maintained in a manner that retains the legibility described above.

**The marking may:**

- be painted on the commercial motor vehicle, or
- consist of a removable device, if that device meets identification and legibility requirements.
- **July 3, 2002 Deadline:** All commercial motor vehicles that were part of a motor carrier's existing fleet on July 3, 2000, and which are marked with an ICC/MC number must come

into compliance by marking the vehicle with the motor carrier identification number issued by the FMCSA, preceded by letters "USDOT" no later than July 3, 2002.

- **July 5, 2005 Deadline:** All commercial motor vehicles that are part of a motor carrier's existing fleet on July 3, 2000, and which are not marked with the legal name or the commercial name, as shown on the Motor Carrier Identification Report (Form MCS-150), on both sides of their commercial motor vehicles, must display the legal name or commercial name given on the Form MCS-150 no later than July 5, 2005.

- Vehicles added to a motor carrier's fleet on and after July 3, 2000, must meet the requirements before being put into service.

## Obtain Public Liability Insurance to Operate in the United States

Under the current regulations Mexican motor carriers registered to operate in the commercial zones of the United States are required to obtain insurance coverage for periods of 24 hours or longer in the amounts required under 49 CFR 387.11. Public liability means liability from bodily injury, property damage, and environment restoration. Mexican motor carriers are also required to possess and carry in the cab of the truck a completed motor carrier MCS-90 insurance endorsement form and an accompanying insurance identification card, binder or similar document indicating the dates of coverage issued by a qualified insurance carrier.

Mexican motor carriers authorized to operate beyond the commercial zones within the United States must have and maintain bodily injury and property damage liability insurance in the amounts required under 49 CFR 387.303. The carrier is required to have proof of insurance from a company that is licensed in the U.S. on file with FMCSA, and must carry proof of insurance on board its vehicles, including:

(1) Proof of acceptable evidence of required bodily injury and property damage insurance to cover the carrier's operation during the time it is in the United States, and

(2) Form MCS-90 endorsement document.

As required under 49 CFR 366.4, the carrier must file with FMCSA form BOC-3, process agent form (Agents of Process) before a certificate of registration is issued.

The FMCSA does not furnish copies of insurance forms. For more information on the minimum levels of financial responsibility, you may call (202) 358-7028 or (202) 358-7029.

---

**Minimum Levels of Financial Responsibility (FMCSRs, Part 387)**
**www.fmcsa.dot.gov/rulesregs/FMCSRs/regs/387menu.htm**

**Motor Carriers of Property**

Motor carriers of property operating commercial motor vehicles in interstate, foreign or intrastate commerce, and for-hire carriers of passengers operating in interstate or foreign commerce must have at least the minimum amount of insurance required by law.

| | |
|---|---|
| **Type of Carriage** : | For hire (in interstate or foreign commerce, with a gross vehicle weight rating of 10,000 or more pounds) |
| **Commodity Transported**: | Property (non-hazardous) |
| **Amount:** | $750,000 |

---

| | |
|---|---|
| **Type of Carriage:** | For hire and private (in interstate or foreign commerce, with a gross vehicle weight rating of 10,000 or more pounds) |
| **Commodity Transported:** | Hazardous substances, as defined in 49 CFR 171.8, transported in cargo tanks, portable tanks, or hopper type vehicles with capacities in excess of 3,500 water gallons; or in bulk Division 1.1, 1.2, and 1.3 materials, Division 2.3, hazard zone A, or division 6.1 Packing Group 1, Hazard Zone A material; in bulk Division 2.1 or 2.2; or highway route controlled quantities of Class 7 material, as defined in 49 CFR173.403 |
| **Amount:** | $5,000,000 |

---

| | |
|---|---|
| **Type of Carriage:** | For hire and private (in interstate or foreign commerce, in any quantity; or in intrastate commerce, in bulk only; with a gross vehicle weight rating of 10,000 or more pounds); |
| **Commodity Transported**: | Oil listed in 49 CFR 172.101; hazardous waste, hazardous materials, and hazardous substances defined in 49 CFR 171.8 and listed in 49 CFR 172.101, but not mentioned in (2) above or (4) below |
| **Amount:** | $1,000,000 |

---

| | |
|---|---|
| **Type of Carriage**: | For hire and private (in interstate or foreign commerce, with a gross vehicle weight rating of less than 10,000 pounds) |

| | |
|---|---|
| **Commodity Transported**: | Any quantity of Class A or B explosives; any quantity of poison gas (Poison A); or highway route controlled quantity radioactive materials as defined in § 173.455. |
| **Amount:** | $5,000,000 |

## Passenger Carriers

**www.fmcsa.dot.gov/rulesregs/FMCSRs/regs/38733.htm#387.33**

Schedule of Limits, Public Liability for hire motor carriers of passengers operating interstate or foreign commerce. Financial Responsibility, Minimum Levels:

**Vehicle Seating Capacity**

- Any vehicle with a seating capacity of 16 passengers or more $5,000,000
- Any vehicle with a seating capacity of 15 passengers or less 1,500,000
  [except as provided in 49 CFR 387.27(b)]

## Federal Motor Carrier Safety Regulations

The following provides highlights of the FMCSRs. To review all the FMCSRs, visit our Web site at **www.fmcsa.dot.gov/rulesregs/FMCSRs/FMCSRsguide.htm**

These regulations include rules regarding Controlled Substances and Alcohol Use and Testing; Commercial Driver's License Standards, Requirements and Penalties; Safety Fitness Procedures; Rules of Practice for Motor Carrier Safety and Hazardous Materials Proceedings; Minimum Levels of Financial Responsibility for Motor Carriers; Filing of Identification Report and Marking of Vehicles; General Qualifications of Drivers; Driving of Commercial Motor Vehicles; Parts and Accessories Necessary for Safe Operation; Hours of Service of Drivers; Inspection, Repair and Maintenance; Transportation of Hazardous Materials; Driving and Parking Rules and Transportation of Migrant Workers.

The following sections contain highlights from these regulations. Again, although every effort is made to assure that the information provided is complete and accurate, it is not intended to take the place of published agency regulations. This document only paraphrases the Federal Motor Carrier Safety Regulations published in Title 49 of the U.S. Code of Federal Regulations. The contents may not be relied upon as a substitute for the official text. The regulations issued by the U.S. Department of Transportation and its Operating Administrations are published in the Federal Register and compiled in the U.S. Code of Federal Regulations (CFR). Copies of appropriate volumes of the CFR in book format may be purchased from the Superintendent of Documents, U.S. Government Printing Office, or examined at many libraries.

## General Requirements (FMCSRs, Part 390)

**www.fmcsa.dot.gov/rulesregs/FMCSRs/regs/390menu.htm**

The Federal Motor Carrier Safety Regulations apply to all employers, employees, and commercial motor vehicles transporting property or passengers in interstate commerce.

**How does the FMCSA define a commercial motor vehicle?** Any self-propelled or towed motor vehicle used on a highway in interstate commerce to transport passengers or property when the vehicle:

Has a gross vehicle weight rating or gross combination weight rating, or gross vehicle weight or gross combination weight, of 4,536 kg (10,001 pounds) or more, whichever is greater; or

- Is designed or used to transport more than 8 passengers (including the driver) for compensation; or

- The operator of vehicles designed or used to transport between 9 and 15 passengers are currently required to file the Form MCS-150, mark their vehicles with a USDOT number,

and maintain an accident register. These operators are not subject to the safety regulations at this time.

- Is designed or used to transport more than 15 passengers, including the driver, and is not used to transport passengers for compensation; or

- Is used in transporting a quantity of hazardous material requiring placarding.

## Qualification of Drivers (FMCSRs, Part 391)

**www.fmcsa.dot.gov/rulesregs/FMCSRs/regs/391menu.htm**

Motor carriers must assure that all drivers of commercial motor vehicles meet the minimum qualifications:

- Must be at least 21 years of age [391.11(b)]
- Speak and read English well enough to converse with the general public, understand highway traffic signs and signals, respond to official questions, and be able to make legible entries on reports and records [391.11(b)]
- Can safely operate the type of commercial motor vehicle he/she is assigned [391.11(b)]
- Know how to safely load and properly block, brace, and secure the cargo [392.9]
- Have only one valid commercial motor vehicle operator's license or Licencia Federal
- Pass a driver's road test or equivalent [391.11(b)]
- Is physically qualified to drive and possess a valid medical certificate (The medical is part of the Licencia Federal. It is not necessary to carry a separate medical certifying document) [391.41]
- Is not "disqualified" (See 383.51 and 391.15) to drive a commercial motor vehicle [391.11(b)]
- Motor carriers must keep driver qualification files for each regularly employed driver [391.51]

## Commercial Driver's License Standards (FMCSRs, Part 383)

**www.fmcsa.dot.gov/rulesregs/FMCSRs/regs/383menu.htm**

Part 383 sets standards that:

- require commercial drivers to be properly qualified, and

- to hold a single valid driver's license (CDL); and

- that disqualifies drivers who do not operate Commercial Motor Vehicles (CMV) safely.

The United States recognizes the International Licencia Federal in place of the U.S. Commercial Driver's License (CDL) requirements in the U.S. Visit the FMCSA Web site at **www.fmcsa.dot.gov/safetyprogs/cdl.htm** or refer to the FMCSRs Part 383.

**Drivers must hold a CDL (or Licencia Federal) if they operate in interstate, intrastate or foreign commerce and drive a vehicle [383.23] that meets any of the following criteria - -**

- Have a gross combination weight rating of 11,794 kg (26,001 pounds) or more, inclusive of a towed unit with a gross vehicle weight rating of more than 4,536 kg (10,000 pounds)
- Have a gross vehicle weight rating of at least 26,001 pounds
- Designed to transport at least 16 passengers including the driver
- Transport a quantity of hazardous materials requiring placarding

**Drivers must notify their employers in writing when they are convicted of a traffic violation [383.31]**

**Drivers will be disqualified from driving when convicted of any of the following violations: [383.51]**

- Driving a commercial vehicle under the influence of alcohol, a disqualifying drug or other controlled dangerous substance
- Leaving the scene of an accident that involves a commercial vehicle
- Using a commercial vehicle to commit a felony
- Using a commercial vehicle to commit serious traffic violations
- Using a commercial vehicle to violate an Out-of-Service order
- Using a commercial vehicle to violate a Federal, State or local law or regulation pertaining to certain offenses at a railroad-highway grade crossing

## Controlled Substances and Alcohol Use and Testing Regulations (FMCSRs, Part 382) www.fmcsa.dot.gov/rulesregs/FMCSRs/regs/382menu.html

Part 382 sets standards that: require employers and commercial motor vehicle drivers to establish and participate in a controlled substance and alcohol testing program. The purpose of the

program is to help prevent accidents and injuries resulting from the misuse of alcohol or use of controlled substances by drivers of commercial motor vehicles.

Employers and drivers must comply with the controlled substances and alcohol testing regulations if they operate a commercial motor vehicle in commerce in any State, [382.103a], and are subject to:

- The commercial driver's license requirements of Part 383 [382.103(a)(1)]
- The Licencia Federal requirements [382.103(a)(2)]

Employers shall ensure that all alcohol or controlled substances testing conducted under this part complies with the procedures set forth in Part 40 (Procedures for Transportation Workplace Drug Testing Programs). The provisions of Part 40 of this title are applicable to employers by Part 382 [382.105] **www.dot.gov/ost/dapc/regulations.html**

**Service Agents:** Public Interest Exclusion prohibits employers from using service agents who are banned by the U.S. Department of Transportation from performing drug and alcohol testing for DOT regulated entities [382.117]

**Stand-down Waiver Provision:** Employers may seek a waiver to stand down an employee before the Medical Review Officer (MRO) has completed the verification process as long as the employer complies with the procedures in 49 CFR 40.21 [382.119

**Prohibitions:** Drivers and employers must not violate the prohibitions in Subpart B of Part 382:

- Prohibitions referring to alcohol misuse [382.201- 382.209]
- Prohibition for refusing to submit to an alcohol or controlled substance test [382.211]
- Prohibitions referring to controlled substances use [382.212- 382.215]

**Types of Testing:** Employers and drivers must ensure the following types of testing are conducted as required by Subpart C of Part 382:

- **Pre-Employment.** Prior to the first time a driver performs a safety sensitive function, the driver must undergo a pre-employment controlled substance test and the employer be in receipt of a confirmed negative test result [382.301] *NOTE: The August 1, 2001 Final Rule, allows employers to conduct voluntary pre-employment alcohol testing pursuant to the employer testing in accordance with the provisions in 49 CFR Part 40*

- **Post Accident.** As soon as practicable following an accident involving a commercial motor vehicle operating on a public road in commerce, the employer shall test the surviving driver for alcohol and controlled substances [382.303]

- **Random.** Every employer and every driver must comply with the random testing requirements [392.305]

- **Reasonable Suspicion**. Employers shall require drivers to submit to an alcohol or controlled substance test when the employer has reasonable suspicion to believe the driver has violated the prohibitions [382.307]

- **Return-to-Duty.** Employers shall ensure that before a driver returns to duty requiring the performance of a safety sensitive function after engaging in prohibited conduct, the driver undergoes a return to duty alcohol and/or controlled substance test [382.309]

- **Follow-Up**. Employers must ensure that a driver who needs assistance in resolving problems associated with alcohol misuse or controlled substance use is subject to unannounced follow-up testing [382.311]

**Record Keeping**. Employers shall maintain records of its alcohol misuse and controlled substances use prevention programs [382.401]

- Employers shall prepare and maintain a summary of the results of its alcohol and controlled substances testing programs [382.403]

- If notified, employers shall prepare and submit annual calendar year summary information [382.403(b)

**Previous Driver Alcohol and Controlled Substance History.** Employers shall inquire about a driver's alcohol and controlled substances history from previous employers during the preceding two years [40.25]

**Educational Material.** Employers shall provide educational materials that explain the controlled substances and alcohol testing requirements [382.601]

**Supervisor Training.** Employers shall ensure designated supervisors receive 60 minutes of training for alcohol and 60 minutes of training for controlled substances in order to recognize physical, behavioral, speech, and performance indicators of probable alcohol misuse and use of controlled substances [382.603]

**Referral to Substance Abuse Professional**. Drivers who engage in prohibited conduct of the drug and alcohol testing regulations must be referred to a substance abuse professional and comply with subsequent treatment or educational recommendations [49 CFR Part 40, Subpart O]

## Driving Motor Vehicles (FMCSRs, Part 392)

**www.fmcsa.dot.gov/rulesregs/FMCSRs/regs/392menu.htm**

- No driver can operate when fatigued or ill [392.3]
- No driver can possess, be under the influence, or use drugs, legal or illegal, that makes driving unsafe [392.4]
- Drivers are prohibited from consuming or being under the influence of alcohol within 4 hours of going on-duty, and at any time while on-duty. Drivers are prohibited from being in possession of alcohol while on duty. [392.5]
- Cargo must be properly loaded and secured [392.9]
- Drivers of buses transporting passengers and vehicles transporting certain classes or divisions of hazardous materials must stop at railroad crossings and ensure that no trains are coming, before proceeding. Also, drivers of these vehicle must not shift gears when traversing railroad tracks [392.10]
- Drivers must wear seatbelts when operating a commercial motor vehicle. [392.16]
- Emergency signals must be used when stopped on a shoulder or highway [392.22]
- Warning devices must be placed in specific locations [392.22b]
- Motor carriers/drivers shall not use radar detectors [392.71]

## Hours of Service (General) (FMCSRs, Part 395)

**www.fmcsa.dot.gov/rulesregs/FMCSRs/regs/395menu.htm**

**10-Hour Rule [395.3]**

- Motor carriers must not permit or require drivers to drive, and drivers must not operate their vehicles, more than 10 hours following 8 consecutive hours off duty.

**15-Hour Rule [395.3]**

Motor carriers must not permit or require drivers to drive, and drivers must not operate their vehicles, for any period after being on duty 15 hours following 8 consecutive hours of duty.

**60-Hour Rule [395.3]**

- Motor carriers must not permit or require a driver to drive, and drivers must not operate their vehicles for any period after being on duty 60 hours in any 7 consecutive days if the motor carrier does not operate commercial motor vehicles every day of the week.

**70-Hour Rule [395.3]**

- Motor carriers must not permit or require a driver to drive, and drivers must not operate their vehicles for any period after being on duty 70 hours in any 8 consecutive days if the motor carrier operates commercial motor vehicles every day of the week.

**On duty time** means all time from the time a driver begins to work or is required to be in readiness to work until the time the driver is relieved from work and all responsibility for performing work. On duty time must include:

(1) All time at a plant, terminal, facility, or other property of a motor carrier or shipper, or on any public property, waiting to be dispatched, unless the driver has been relieved from duty by the motor carrier;

(2) All time inspecting, servicing, or conditioning any commercial motor vehicle at any time;

(3) All driving time as defined in the term driving time;

(4) All time, other than driving time, in or upon any commercial motor vehicle except time spent resting in a sleeper berth;

(5) All time loading or unloading a commercial motor vehicle, supervising, or assisting in the loading or unloading, attending a commercial motor vehicle being loaded or unloaded, remaining in readiness to operate the commercial motor vehicle, or in giving or receiving receipts for shipments loaded or unloaded;

(6) All time repairing, obtaining assistance, or remaining in attendance upon a disabled commercial motor vehicle;

(7) All time spent providing a breath sample or urine specimen, including travel time to and from the collection site, in order to comply with the random, reasonable

suspicion, post-accident, or follow-up testing required by Part 382 of this subchapter when directed by a motor carrier;

(8) Performing any other work in the capacity, employ, or service of a motor carrier; and

(9) Performing any compensated work for a person who is not a motor carrier.

**Driving time** means all time spent at the driving controls of a commercial motor vehicle in operation.

**Off-Duty:** Meals and other routine stops made during a tour of duty as may be recorded as off-duty time provided:

(1) The driver must have been relieved of all duty and responsibility for the care and custody of the vehicle, its accessories, and any cargo or passengers it may be carrying.

(2) The duration of the driver's relief from duty must be a finite period of time, which is of sufficient duration to ensure that the accumulated fatigue resulting from operating a CMV will be significantly reduced.

(3) If the driver has been relieved from duty, as noted in (1) above, the duration of the relief from duty must have been made known to the driver, prior to the driver's departure, in written instructions from the employer. There are no record retention requirements for these instructions on board a vehicle or at a motor carrier's principal place of business.

(4) During the stop, and for the duration of the stop, the driver must be at liberty to pursue activities of his/her own choosing and to leave the premises where the vehicle is situated.

## Parts & Accessories Necessary for Safe Operations (FMCSRs, Part 393)
**www.fmcsa.dot.gov/rulesregs/FMCSRs/regs/393menu.htm**

Every commercial motor vehicle must be equipped with certain standard equipment. Other (optional) equipment or accessories are permitted only if these items do not decrease the operational safety of the vehicle.

### Lights
Part 393 specifies the required color, position, and types of lamps and reflectors for commercial motor vehicles. All lamps and reflectors for commercial motor vehicles manufactured after March 7, 1989 must meet the requirements of the National Highway Traffic Safety Administration's ( NHTSA) Federal Motor Vehicle Safety Standard (FMVSS) No. 108 (49 CFR 571.108) in effect on the date of manufacture. Lamps and reflectors on commercial motor vehicles manufactured on or prior to March 7, 1989 must meet either the requirements of Part 393 or of FMVSS No. 108 that were in effect on the date of manufacture.

Certain trailers manufactured on or after December 1, 1993, must have red and white retroreflective sheeting or additional reflex reflectors to make them more visible to other motorists under conditions of reduced visibility. Trailers manufactured before December 1, 1993 are required to be retrofitted with retroreflective sheeting or additional reflectors as of by June 1, 2001. [393.11] Intermodal container chassis manufactured before December 1, 1993, are required to have been retrofitted as of December 1, 2001.

- All required lamps must light on request at an inspection and must light when required during regular operation of the vehicle.

- All lamps must be permanently and securely mounted on a permanent part of the vehicle. The exceptions are temporary lamps, such as those used in a driveaway-towaway operation or mounted on projecting loads. Temporary lamps must be securely attached.

### Brakes
Commercial motor vehicles must be equipped with the following brake systems:

- A service brake system that meets the requirements of 49 CFR 393.52, which specifies braking and holding performance.

- A parking brake system that meets the requirements of 49 CFR 393.41, which specifies parking brake activation and the method for holding the brakes in the applied position.

- An emergency brake system that conforms to the requirements of 49 CFR 393.52 and consists of either (1) emergency features of the service brake system or (2) a system separate from the service brake system.

Every commercial motor vehicle must be equipped with brakes acting on all wheels, with the following exceptions:

- Trucks and truck tractors with three or more axles, manufactured before July 25, 1980, are not required to have steering axle brakes.

- Vehicles being towed in a driveaway-towaway operation. (However, the towed vehicle must have brakes in operation if the brakes on the towing vehicle are not capable of stopping the combination vehicle under the conditions covered by Section 393.52)

- Any full trailer, semitrailer, or pole trailer having a gross weight of 3,000 pounds or less, provided the trailer weight does not exceed 40 percent of weight of the towing vehicle.

**Breakaway and Emergency Braking**
Every vehicle used to tow a trailer equipped with brakes must have a means of maintaining the operation of the brakes on the towing vehicle in the event that the trailer breaks away from the towing vehicle. Among the other requirements:

- Every truck or truck tractor equipped with air brakes, when used to tow other vehicles equipped with air brakes, must be capable of activating (manually and automatically) the emergency features of the trailer brakes. The brakes must apply automatically when the towing vehicle air supply pressure is between 20 and 45 psi. The manual control must be operable by the driver from the driver's seat, with seat belt in use. Every trailer is required to be equipped with brakes that apply automatically if the trailer breaks away from the towing vehicle. The brakes must remain in the applied position for at least 15 minutes.

**Brake System Warning Indicators**
Buses, trucks, and truck tractors must be equipped with a signal that provides a warning to the driver when a failure occurs in the vehicle's service brake system. This signal requirement covers hydraulic brake systems, air brake systems, vacuum brake systems, and hydraulic brakes applied or assisted by air or vacuum.

**Brake Tubing and Hose**
Safe and reliable operation of a vehicle's brakes depends upon adequate protection of the tubing and hoses from mechanical and other damage.

- Hoses and tubing must meet FMVSS No. 106

- Design and construction of brake tubing and hose must ensure proper, adequate, and continued functioning.

- Installation must ensure proper functioning of the hose. Length and flexibility must accommodate all normal motions of the parts to which the hose is attached.

- Protection against mechanical damage must include protection against chafing and kinking.

- Protection from high temperature must include protection from or location away from exhaust pipes and other sources of high temperatures.

**Windshield Condition**
A vehicle's windshield must be free of discoloration and cracks in the area extending from the top of the steering wheel to within two inches of the top of the windshield.

**Window Construction - Emergency Exits on Buses**
Trucks and truck tractors must have windows on the doors to meet the minimum size requirements

Buses must have emergency exits that meet the NHTSA's requirements under FMVSS No. 217. [393.61]

**Fuel Systems and Fuel Tanks**
Fuel systems used for the operation of commercial motor vehicles and of auxiliary equipment installed on or used in connection with commercial motor vehicles must meet the following requirements. [393.65]

Each fuel system must be located so that:

- No part of the system extends beyond the widest part of the vehicle.

- No part of a fuel tank is forward of the front axle or a power unit.

- Fuel lines do not extend between a towed vehicle and the towing unit while the combination is in motion.

- No part of the fuel system of a bus manufactured on or after January 1, 1973, is located within or above the passenger compartment.

Liquid fuel tanks must meet manufacturing standards contained in § 393.67.

LPG fuel tanks must meet requirements of § 393.69.

**Coupling Devices**
Sections 393.70 and 393.71 provide requirements for the attachment and location of the fifth wheel and requirements for the towing of full trailers. In addition, requirements for saddle mount operations are provided.

**Cargo Securement**
Sections 393.100-393.106 provide the standards covering cargo securement. Cargo is required to be loaded and secured so that it will not shift or fall off the vehicle. The cargo securement regulations include minimum strength requirements for securement devices and requirements for protection against longitudinal and lateral movement of the cargo. In addition, Section 393.106 covers headerboards.

## Miscellaneous Parts and Accessories

**Tires [393.75]**
Tires used on commercial motor vehicles must meet specific safety standards. No tire that is in use on a commercial motor vehicle may have any of the following defects:

- Body ply or belt material exposed through the tread or sidewall
- Tread or sidewall separation
- Audible leak (or flat)
- A cut exposing the ply or belt material
- A tread groove pattern depth of less than 4/32 of an inch (front tires) or 2/32 of an inch (other tires)
- Regrooved tires on front wheels of trucks or truck tractors, which have a load carrying capacity equal to or greater than 2,232 kg (4,920 pounds).
- Regrooved, recapped, or retreaded tires on the front wheels of buses are prohibited.

**Sleeper Berths [393.76]**
Sleeper berths must meet minimum dimensions. A sleeper berth must not be installed on a trailer and must be located in or adjacent to the cab. An exit door at least 18" high by 36" wide must lead directly into the cab.

Sleeper berths must be equipped with adequate sheets and blankets, and a mattress and springs or innerspring mattress. They must be adequately ventilated, and located so as to protect occupants

against exhaust heat and fumes and fuel leaks. A mandatory restraint system must withstand at least 2,221 kg (6,000 lbs.) of force applied toward the front of the vehicle.

**Exhaust Systems [393.83]**

Exhaust systems must meet the following requirements:

- The exhaust system and discharge must be located where it is not likely to burn or damage the electrical wiring, the fuel supply, nor any combustible part of the vehicle.
- The discharge from the exhaust system must not be located immediately below the fuel tank or the fuel tank filler pipe.
- The exhaust system may not be temporarily repaired with patch or wrap material.
- The exhaust pipe and mufflers must be securely fastened to the vehicle.
- The exhaust system may not leak or discharge at any point forward of or directly below the driver or sleeper compartment.
- For trucks and truck tractors, the exhaust system must discharge at a location to the rear of the cab, or above and near the rear of the cab.
- For a bus powered by a gasoline engine, the exhaust pipe must discharge at a point no farther forward than six inches forward of the rearmost part of the bus.
- For a bus powered by diesel or other fuel (not gasoline), the exhaust pipe must discharge either:
    - At a point no farther forward than 15 inches forward of the rearmost part of the bus, or
    - To the rear of all doors or windows designed to be open (not including emergency exits).

**Rear Impact Guards (Rear Bumpers) [393.86]**

Every commercial motor vehicle must be equipped with either bumpers or other devices that prevent other vehicles from going under the rear of the trailer. Tractors, pole trailers, and vehicles being delivered in a driveaway-towaway operation are exempt. Certain trailers manufactured on or after January 26, 1998 must have rear impact guards that meet Federal Motor Vehicle Safety Standards (FMVSS) Nos. 223 & 224.

**Seat Belts**

Commercial motor vehicle must be equipped with seats, seat belt assemblies, and seat belt anchorages as specified in the Federal Motor Vehicle Safety Standards (FMVSS).

**Emergency Equipment**

Commercial motor vehicles must carry the following emergency equipment:

- Fire extinguisher (not required for driveaway-towaway operations)

- Spare fuses

Warning devices for stopped vehicles (triangles that meet FMVSS No. 125, or fuses that meet UL 912) [393.95]

- Fire extinguishers must be securely mounted and readily accessible for use. Each extinguisher must have a gauge or other indicator that shows whether the extinguisher is fully charged, and a label showing its Underwriters' Laboratories (UL) rating. The fire extinguisher(s) must meet one of the following standards:

- One extinguisher with a UL rating of 5 B:C or more or

- Two extinguishers each with a UL rating of 4 B:C or more.

- One extinguisher with a UL rating of 10 B:C, if the vehicle is transporting placardable quantities of hazardous material.

**Frames, Cab and Body Components, Wheels, Steering, and Suspension Systems**

Suspension systems are required to be structurally sound and in safe working order, including the following:

- Axles must be in proper alignment, and no positioning part can be cracked, broken, loose, or missing.

- Adjustable axles must have locking pins in place.

- Leaf springs must not be cracked, broken, missing, or shifted out of position.

- Coil springs must not be cracked or broken.

- Torsion bars must not be cracked or broken.

- Air suspensions must support the vehicle in a level position, and must not leak.

**Steering system must be in proper working order, which includes the following:**

- Steering wheel must be properly secured and no cracked or missing spokes

- Steering wheel lash must meet the requirements of Section 393.209

- Steering column must be securely fastened

- Steering system must not have worn or welded universal joints, loose steering gear box, missing bolts, or a loose pitman arm on the steering gear output shaft.

- Power steering unit must not have loose or broken parts, frayed, cracked, or slipping belts; leaks; or insufficient fluid in reservoir.

# NORTH AMERICAN STANDARD CRITICAL ITEM INSPECTION PROCEDURE

## HOW TO PASS THE LEVEL I CRITICAL ITEM INSPECTION AND GET A CVSA DECAL

This procedure should be conducted with two people - one at the vehicle controls and one conducting the Inspection
For more detailed information – see the written procedures contained in the
North American Standard Level I Inspection Procedures

### STEP 1 -- CHOOSE THE INSPECTION SITE

- Select a safe location, preferably a paved, level surface away from traffic and able to support the weight of the vehicle.

### STEP 2 -- INSPECTION PREPARATION

- Turn off the engine, put transmission in neutral, release all brakes, leave ignition in the on position. Check seat belt condition. Check the cab area for possible illegal presence of alcohol, drugs, radar detector, weapons or other contraband.

### STEP 3 -- CHECK CARGO TANK

- Retest requirements, internal valves, tank authorization, manhole covers, discharge valves, tank integrity, support & anchoring requirements.

### STEP 4 -- INSPECT FRONT OF TRACTOR

- Head lamps, turn signals, (do not use four way flashers to check turn signals. They will override inoperative turn signals.) Check for improper color, operation, mounting, and visibility.
- Windshield wipers. Check for improper operation. Two wipers are required unless one can clean the driver's field of vision.

### STEP 5 -- INSPECT LEFT FRONT SIDE OF TRACTOR

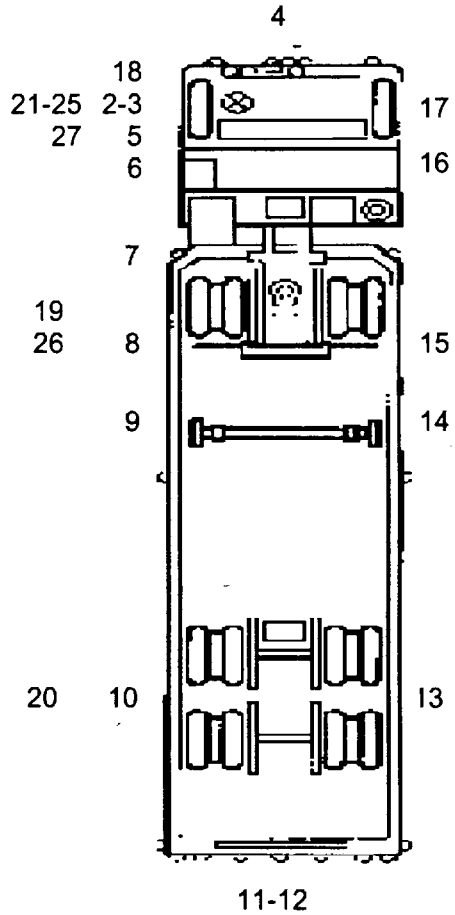


- Left front wheel and rim.
- Left front tire.

### STEP 6 -- INSPECT LEFT SADDLE TANK AREA

- Left fuel tank area.
- Exhaust system.

### STEP 7 -- INSPECT TRAILER FRONT

- Air and electrical lines

### STEP 8 -- CHECK LEFT REAR TRACTOR AREA

- Wheels, rims and tires.
- Lower fifth wheel.
- Upper fifth wheel.
- Sliding fifth wheel.
- Lamps.

### STEP 9 -- INSPECT LEFT SIDE OF TRAILER

- Frame and body.
- Condition of hoses.
- Van and open-top trailer bodies.

### STEP 10 -- LEFT REAR TRAILER WHEELS

- Wheels, rims, and tires.
- Sliding tandem.

### STEP 11 -- REAR OF TRAILER

- Tail, stop, turn signals and lamps on projecting loads.
- Cargo securement.

### STEP 12 -- INSPECT DOUBLE AND TRIPLE TRAILERS

- If a second and/or third trailer are attached, repeat all applicable inspection items in previous steps for wheels, tires, frame, suspension, brake lights, van trailers, and cargo securement. It may be necessary to start and stop engine.

SAFETY DEVICES – FULL TRAILERS, CONVERTER DOLLIES

- Check the safety devices (chains/wire rope) for sufficient number, missing components, improper repairs, and devices that are incapable of secure attachments. Inspect pintle hook, eye and drawbar for cracks, excessive movement, and improper repairs.

**STEP 13 -- INSPECT RIGHT REAR TRAILER WHEELS**

- Check as in step 10.

**STEP 14 -- INSPECT RIGHT SIDE OF TRAILER**

- Check as in step 9.

**STEP 15 -- INSPECT RIGHT REAR TRACTOR AREA**

- Check as in step 8.

**STEP 16 -- INSPECT RIGHT SADDLE TANK AREA**

- Check as in step 6.

**STEP 17 -- INSPECT RIGHT FRONT SIDE OF TRACTOR**

- Check as in step 5.

**STEP 18 -- INSPECT STEERING AXLE**

- Steering system (both sides).
- Front suspension (both sides).
- Front axle.
- Frame and frame assembly.
- Front brakes (both sides).
- Mark push rods (both sides).

**STEP 19 -- INSPECT AXLES 2 AND/OR 3**

- Same as step 18.

**STEP 20 -- INSPECT AXLES 4 AND/OR 5**

- Same as step 18.

**STEP 21 -- CHECK BRAKE ADJUSTMENT**

- Insure air pressure is between 90 and 100 p.s.i. Have driver/helper make a full brake application and measure push rods.

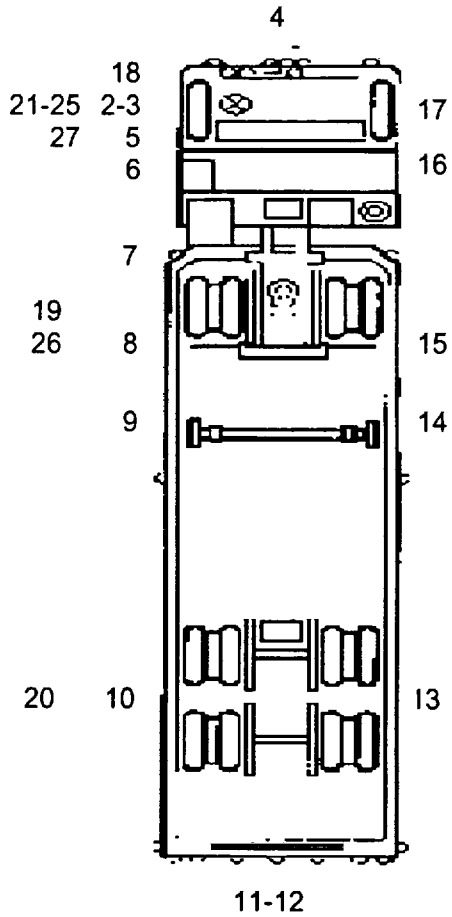


**STEP 22 -- TEST AIR LOSS RATE**

- If a leak is suspected, check air loss rate with air reservoir at 80 or 90 p.s.i. and full brake application. Pressure should be maintained or increased.

**STEP 23 -- TEST LOW AIR PRESSURE WARNING DEVICE**

**STEP 24 -- INSPECT TRACTOR PROTECTION SYSTEM**

- (This procedure tests both the tractor protection valve and the emergency brake)

**STEP 25 -- CHECK STEERING WHEEL LASH**

**STEP 26 -- CHECK FIFTH WHEEL MOVEMENT**

**STEP 27 -- COMPLETE THE INSPECTION**

- If any violations were found of any of the critical inspection items, the appropriate company officials should be informed of the violations and that repairs were made.

*Copyright 1997*
*Commercial Vehicle Safety Alliance*

For more information about the Commercial Vehicle Safety Alliance, write, call, fax, or e-mail to:

CVSA
5430 Grosvenor Lane, Suite 130
Bethesda, MD 20814
Phone: (301) 564-1623
Fax: (301) 564-0588
E-mail: cvsahq@cvsa.org

Be sure to check out our web site at:

**www.cvsa.org**

## Inspection, Repair, & Maintenance (FMCSRs, Part 396)

**www.fmcsa.dot.gov/rulesregs/FMCSRs/regs/396menu.htm**

The Federal Motor Carrier Safety Regulations include requirements applicable to every interstate motor carrier, its officers, drivers, agents, representatives, and employers directly concerned with the inspection, repair and maintenance of commercial motor vehicles.

Every motor carrier must systematically inspect, repair, and maintain all commercial motor vehicles under its control. Motor carriers must maintain the following information for every vehicle they have controlled for 30 days or more:

- Identifying information, including company number, make, serial number, year, and tire size;
- A schedule of inspections to be performed, including type and due date
- Inspection, repair, and maintenance records
- Records of tests conducted on buses with push out windows, emergency doors, and marking lights.

These records must be retained for one year at the location where the vehicle is garaged, and maintained for six months after the vehicle leaves the carrier's control (via sale, trade-in, or scrap).

**Roadside Inspection Report.** When a commercial motor vehicle is inspected by a Federal, State, or local official at the roadside, the driver who receives the report must deliver it to the motor carrier. An official of the motor carrier must examine the roadside inspection report and ensure that any violations or defects noted on the report are corrected. Within 15 days after the inspection, the carrier must sign the completed roadside inspection report to certify that all violations have been corrected, and then return it to the indicated address. A copy must be retained for 12 months from the date of inspection.

**Post Trip Report.** Every carrier must require its drivers to prepare a daily written post-trip inspection report at the end of each driving day. Every driver is responsible for preparing such a report for each vehicle driven. This report must cover at least the following parts and accessories:

- Service brakes (including trailer brake connections)
- Parking (hand) brake

- Steering mechanism
- Lighting devices and reflectors
- Tires
- Horn
- Windshield wipers
- Rearview mirrors
- Coupling devices
- Wheels and rims
- Emergency equipment

The report must list any condition that the driver either found, or had reported to him/her that would affect safety of operation or cause a breakdown. If no defect or deficiency is reported or found, the report should state this. The driver must sign the report in all cases.

Before dispatching the vehicle again, a carrier must certify that any defect or deficiency has been corrected, or that the defect or deficiency does not require immediate correction. Carriers must keep the original post-trip inspection report and the certification of repairs for at least three months from the date of preparation.

**Pre-Trip Safety Assurance**. Before starting out, the driver must be satisfied that the motor vehicle is in safe operating condition. If the last vehicle inspection report notes any deficiencies, the driver must review and sign to acknowledge that necessary repairs have been completed.

**Periodic Inspection.** Every commercial vehicle*, including each unit in a combination vehicle (e.g., truck tractor, trailer, converter dolly, etc.) requires periodic inspection that must be performed at least once every 12 months. At a minimum, inspections must include all items enumerated in the Minimum Periodic Inspection Standards, Appendix G to Subchapter B. Carriers may perform required annual inspections themselves. The original or a copy of the periodic inspection report must be retained by the motor carrier for 14 months from the report date. In addition, documentation (report, sticker, or decal) of the most recent periodic inspection must be kept on the vehicle.

Mexican vehicles engaged in U.S. operations beyond the border commercial zones will require inspections once every 3 months for the first 4 ½ years of operation to maintain compliance with CVSA decal requirements.

## Federal Hazardous Material Regulations

A motor carrier that transports a hazardous material, must comply with the Federal Hazardous Materials Regulations, 49 CFR 100-185. See "How to Comply With the Hazardous Materials Regulations" at **www.fmcsa.dot.gov/safetyprogs/fhmr/English/HazMat%20(Eng)_index.htm (English HTML version), www.fmcsa.dot.gov/pdfs/HazMat%20Comply_Eng.pdf (English PDF version); www.fmcsa.dot.gov/safetyprogs/fhmr/Espanol/HazMat%20(Sp)_index.htm (Spanish HTML version), www.fmcsa.dot.gov/pdfs/HazMat%20Comply_Sp.pdf (Spanish PDF version).** The HM regulations cover the following basic areas:

- Shipper requirements
- Carrier requirements
- Proper Shipping names
- Classifications
- Identification numbers
- Shipping papers
- Package marking
- Authorized packages
- Labeling
- Placarding
- Emergency response information
- Training
- Loading & unloading
- In addition, there are more requirements in the Federal Motor Carrier Safety Regulations which include insurance requirements, operational restrictions, Commercial Drivers License endorsements, routing, parking, and attendance requirements for hazardous materials **www.fmcsa.dot.gov/rulesregs/FMCSRs/regs/397menu.htm**

For more information on transporting Hazardous Materials, visit the main DOT HM Web site at **http:\\hazmat.dot.gov** or call **1-800-HMR-4922**

### Emergency Procedures

Transporters are required to know the Federal and state emergency procedures if they have a spill or accidental release of hazardous and dangerous substances, including oil. Transporters should call 911 to report all spills to the local emergency authorities and be familiar with state law and state reporting requirements. Transporters should also call the National Emergency Response Hotline at 1-800-424-8802 for certain releases involving hazardous substances and oil that trigger the federal notification requirements under several laws. More information on the National Emergency Response Program may be found at:
**http://www.epa.gov/superfund/programs/er/nrs/nrsnrc.htm** .

Two phases of incident reporting are required in the U.S. Hazardous Materials Regulations. Section 171.15 covers immediate telephonic notification following an incident and §171.16 outlines written reporting procedures; both sections are available to view online at **http://hazmat.dot.gov/spills.htm**. Also available are the Incident Report Form 5800.1, a guidance document for preparing incident reports, the 2000 Emergency Response Guidebook, and tabular summaries of hazardous materials incidents by mode, year, state, hazard class, etc.

**Transporters Importing Hazardous Waste**

1. EPA I.D. Number: All transporters of hazardous waste must have a valid EPA I.D. number. A transporter can obtain an EPA I.D. number by using EPA Form 8700-12. Transporters may receive an EPA I.D. number from the EPA Regional Office for the state in which the waste first enters the United States. For more information, call EPA's RCRA Information Hotline at 800-424-9346 or 703-412-9810.

2. DOT HM Regulations: The transporter must comply with DOT HM regulations. (See 49 CFR Parts 171-179.).

3. Manifest Requirements: A U.S. importer who transports, or offers for transportation, hazardous waste for offsite treatment, storage or disposal must prepare a U.S. Uniform Hazardous Waste Manifest (EPA Form 8700-22A), as required by 40 CFR § 262.20. The manifest is the key document, required by regulatory agencies, to accompany hazardous waste shipments.

   Manifesting requirements for imported waste (40 CFR § 262.60) are similar to domestic manifesting requirements, except that the manifest must also contain:

   - Valid U.S. Importer's EPA ID number;
   - Complete name and address of both U.S. importer and foreign generator in the "Generator's Block";
   - Signature of the U.S. importer or his agent in the "Generator's Certification" Block; and
   - Signature of the initial transporter.

   The manifest form used to ship imported waste must be from the state where the final destination is located, if that state supplies a manifest. If the state of the final destination does not supply a manifest, use the manifest from the state of import or use the "Uniform Hazardous Waste Manifest" (EPA Form 8700-22A).

State Requirements: States may have additional requirements governing the transportation and disposal of hazardous waste. Transporters must be familiar with the state laws in which they operate. For a list of state contacts regarding hazardous waste laws, call EPA's RCRA Information Hotline at 800-424-9346 or 703-412-9810.

**Transporter Exporting Hazardous Waste from the United States**

1. While a Shipment is in Transit in the United States: If a motor carrier is transporting hazardous waste for export, the motor carrier must have a manifest and the acknowledgment of consent from the importing and transit countries. It is the exporter's responsibility to submit to EPA Headquarters in Washington, D.C., a notification of intent to export. This notification describes the type and amount of waste, its itinerary, the number of shipments expected, and the period during which the shipments will occur. EPA forwards this notification to the government(s) of all concerned countries. The government of the importing country must consent to the shipment before it may proceed. The U.S. exporter may not allow a shipment to proceed unless EPA has notified it of the consent of the importing country, as well as that of any transit countries. For more information, call EPA's RCRA Information Hotline at 800-424-9346 or 703-412-9810.

2. Deposit of Manifest at the Border: The motor carrier must sign and date the manifest (block 15) upon leaving the U.S. with hazardous waste and deposit the manifest with U.S. Customs. 40 CFR 263.20(g)(1) and (2).

**Transporters Importing Pesticides.**

Notice of Arrival Form: U.S. Customs regulations (19 CFR §12.113) prohibit the importation of pesticides without a completed Notice of Arrival (NOA; EPA Form 3540-1). The NOA is filled out by the importer prior to importation and submitted to the EPA regional office applicable to the intended port of entry. The NOA indicates the identity and amount of the product, the arrival date, and where the product can be inspected. The EPA-reviewed and signed form is returned to the importer for presentation by the importer or his agent to U.S. Customs when the shipment arrives in the U.S. The motor carrier may be considered the importer's agent and, in many instances, can present a copy of the NOA to Customs on arrival to the U.S. Carrying a copy of the NOA with the shipment may help the motor carrier avoid unnecessary delays at the port of entry. After arrival, EPA may inspect the shipment for compliance with U.S. pesticide laws. NOA forms can be obtained from the Federal Insecticide, Fungicide and Rodenticide Act (FIFRA) contacts in the EPA Regional Offices. These contacts may be found at: **http://www.epa.gov/oppfead1/international/noalist.htm.**

**Transporters Importing Toxic or Chemical Substances**

United States Customs regulations (Title 19 § 12.118 to 12.128 and 12.728) and Toxic Substances Control Act (TSCA) Part 13 and 40 CFR Part 707 requires the importer of a chemical substance or mixture to certify that the shipment either complies with TSCA, or is not subject to TSCA. Importations will not be released from Customs custody unless proper certification is presented to Customs that the import "complies with" or "is not subject to" the requirements of the Toxic Substances Control Act, or if it is already identified as a food, drug, or active pesticide

ingredient. Motor Carriers should work with the importers to ensure that Customs receives the proper certification and should always, where possible, have a copy of the certification to avoid unnecessary delays at Customs. For more information, contact the TSCA Assistance Information Office at (202) 554-5603 or visit EPA's Office of Pollution Prevention and Toxics website at **http://www.epa.gov/opptintr/international** and EPA's Polychlorinated Biphenyls (PCBs) Homepage at **http://www.epa.gov/opptintr/pcb/coordin.htm** .

**Transporters Importing Ozone Depleting Substances**

The transporter or importer must present an EPA notice of approval to United States Customs for any Class I previously used ozone-depleting substance or for Class I exempt ozone depleting substance. Title 6 of the Clean Air Act bans the production, importation, distribution and sale of many Ozone Depleting Substances in the United States. 40 CFR §82.4 bans generally all Class I substances in the U.S. including production and import. There are a few limited exemptions for essential use allowances including medical devices (metered dose inhalers) and aviation safety (solvent in solid rocket motors). With prior approval from EPA, recycled or previously used substances are not banned from importation nor are substances produced for export to various developing countries. Class II substances will begin phase-out in 2003. For more information, contact Lars Wilcut of EPA's Global Programs Division at 202-564-2411 or visit EPA's Ozone Depletion Resource Center at http://www.epa.gov/ozone/resource/center.html .

**Hazardous Materials Registration Program**

In 1990, the Federal hazardous materials transportation law required the Secretary of Transportation to establish a registration program to gather information about hazardous materials in transportation and to provide grants to support hazardous materials emergency response planning and training activities by State, territorial, tribal and local governments. As a result, the Department of Transportation's Research and Special Programs Administration (RSPA) established the Hazardous Materials Emergency Preparedness (HMEP) Grants Program. Emergency planning and training helps communities prepare for, and respond to, chemical spills, releases, and other hazardous materials emergencies that may occur. HMEP grants are funded by the Hazardous Materials Registration Program.

Approximately 3.2 million firefighters, emergency medical technicians, law enforcement officers, and other responders comprise the nation's emergency response community. Since 1992 over 800,000 emergency responders have been trained, in part, using funds from the HMEP Grants Program. New changes to the registration fee policy will permit the funding for emergency planning and training activities to increase to $12.8 million annually. This increase is necessary to more fully train emergency response personnel on all levels with the most advanced training materials and techniques available.

You must register before July 1 of each year or before engaging in any of the activities requiring registration, whichever is later. Both Federal and State authorities have the ability to enforce the

registration requirement. Penalties may be assessed up to **$27,500**. If you have not registered in the past, or skipped a year, you may still register and pay the fee for that period without penalty. Registration began in 1992.

Registration forms and additional information may be obtained from:
**http://hazmat.dot.gov/register.htm**

**Hazardous Materials Publications:**

Videos, training materials, fact sheets, newsletters, and other safety related information are available from RSPA. To obtain these materials:

Telephone: (202) 366-2301
Fax: (202) 366-7342
Email: **TRAINING@rspa.dot.gov**
Write: U.S. Department of Transportation; Research and Special Programs Administration; 400 Seventh Street, SW, DHM-50; Washington, DC 20590-0001

Hazardous materials training is provided to Federal, State, and local enforcement agencies, industry, and emergency response personnel. The major focus is on hazardous material compliance, enforcement, and emergency response. New emphasis is being placed on PC-based self-study programs through a CD-ROM modular training series. Classroom training is provided by the staff of the Transportation Safety Institute, Oklahoma City, Oklahoma, and at selected sites throughout the country.

**Outreach Programs**

RSPA sponsors the Cooperative Hazardous Materials Education (COHMED) program, Multimodal Seminars, and the Hazmat Safety Assistance Team (HMSAT). The Safety Assistance Team plans, coordinates, and implements hazmat safety program activities and provides advice concerning technical assistance, compliance and regulatory requirements to Federal, state and local governments, and the private sector. These outreach efforts encourage partnerships among agencies, industry, associations, public interest groups, and Native American tribes. Each supports national uniformity of regulations and enforcement activities and the safe transportation of hazardous materials by air, rail, highway, and water. Through RSPA's outreach programs, participants meet, obtain training in hazardous materials transportation, and discuss issues of mutual concern. For information call (202) 366-4900.

**Hazardous Materials Information Center**

By using our 800 telephone number (800-HMR-4922), you can obtain hazardous materials transportation information and copies of rulemakings and training materials, or report alleged violations of the HMR. INFO-CENTER specialists are on duty Monday through Friday from 9

AM to 5 PM Eastern standard time; however, you may call anytime, 24 hours a day, seven days a week, and leave a message. A specialist will return your call before the end of the next business day.

**Hazardous Materials Internet Website**

RSPA's Hazardous Materials Safety (HMS) Internet website **http://hazmat.dot.gov** is designed to disseminate information about the agency's programs and activities and to assist the hazmat community in complying with the Hazardous Materials Regulations (HMR). The website is updated monthly to reflect current HMS activities and includes: 49 CFR Parts 100-185, recent rulemakings, exemptions to the HMR, letters of clarification on the HMR, upcoming public meetings and conferences, international activities, frequently requested documents and files, the ERG, Incident Report Form DOT F 5800.1 and instructions, and Registration Program Form DOT F 5800.2.

## State Motor Carrier Safety and Economic Regulations

For information on safety requirements specific to each State refer to our "Links to State Governments" on the FMCSA Web site at **www.fmcsa.dot.gov/links.htm#STGOV** or contact each State Department of Motor Vehicle.

## Regulations Only Applicable to Motor Carriers of Passengers

- **Emergency Doors (Section 393.92)**
  If the bus is equipped with an emergency door, the door must be marked as an emergency exit. Emergency doors must also be identified by operating red lamps.

- **Windows (Section 393.61 & 393.63)**
  Buses built before September 1973 must have laminated safety glass. Those built after that date must have push out windows. The safety glass or push out windows must be marked as emergency exits.

- **Commercial Driver's License (Part 383)**
  An operator must obtain a passenger endorsement to his or her CDL in order to operate a commercial motor vehicle that is a passenger vehicle.

- **Safe Operation, Buses (392.62)**
  Rules must be followed regarding standees, aisle seats, and baggage and freight storage and securement in order for a bus to be legally operated.

- **Towing or Pushing Loaded Buses (392.63)**
  Unless it would be safer to do so, no disabled bus with passengers may be towed or pushed.

- **Buses, Driveshaft Protection (393.89)**
  There are protection standards for a driveshaft that extends lengthways under the floor of a passenger compartment of a bus.

- **Buses, Standee Line or Bar (393.90)**
  A bus that is designed and constructed to allow standees must be marked with a standee line and have an explanatory sign.

- **Buses, Aisle Seats Prohibited (393.91)**
  Aisle seats are prohibited unless they automatically fold and leave a clear aisle when unoccupied.

## Crash Prevention

**http://www.fmcsa.dot.gov/factsfigs/eta/index.html**
FMCSA has a section in the Educational Assistance Package, which is designed to provide motor carriers and drivers with an introduction to the concepts of accident preventability analysis and accident countermeasures. The material suggests practical measures that can be taken now to prevent accidents, though its main intent goes further. The core of the presentation is a series of case histories of successful countermeasures. These are true stories of industry successes in promoting highway safety. The case histories are presented, together with a guide called *Determining Preventability of Accidents*, to help readers analyze accidents and create strategies to keep similar accidents from happening in the future.

**www.fmcsa.dot.gov/factsfigs/eta/Counter.html**
The FMCSA intends to stimulate thinking and discussion about accident preventability and prevention within the motor carrier industry. The preventability guide and the *Accident Countermeasures* cases are not rating sheets. They are guidelines and discussion tools to help carriers and drivers look at their unique operations and practices with an eye to identifying opportunities to make safety improvements.

## State Requirements for Credentials

## Fuel Taxes, Registration Fees, and Other Fees in the U.S. States

Motor carriers traveling throughout the United States are required to pay fees and taxes to states that support the construction and maintenance of roads and bridges upon which they travel. U.S. motor carriers pay these fees and taxes to jurisdictions based on mileage traveled and fuel consumed in each jurisdiction, or by purchasing a trip permit that allows them to travel in a jurisdiction for a predetermined amount of time.

Mexican carriers must obtain trip permits for each of the jurisdictions in which they travel. (Alternatives to this requirement that would provide for Mexican Government participation in the International Registration Program or Mexican carriers participation in the program are under active development at the time this report is being written. Carriers should check for updates of this section prior to beginning operations.) Carriers entering any of the U.S. jurisdictions listed below must obtain these permits and should contact the agencies or services as listed.

NOTE: Many states use *wire services* or *permit vendors* who are authorized to issue trip permits. *Permit vendors* are usually located at truck stop or service centers. The following is a partial list of known *wire services* authorized to issue trip permits and their telephone numbers:

*Transceiver* 1-800-749-6058
*Transcom* 1-800-888-9101
*CCIS* 1-800-233-5588
*Trans/Mid-America, Inc.* 1-800-228-7577
*Custom Permit Service Co.* 1-800-669-5014
*Xero-Fax, Inc.* 1-800-937-6329
*Interstate Permit Service* 1-614-575-9490
*Nova Permits & Pilot Cars* 1-800-567-7775

ALABAMA
**IRP Contact:** Wire Services
**IFTA Contact:** Brenda R. Coone (334/353-7839)

ARIZONA
**IRP Contact:** Port of Entry
**IFTA Contact:** Oliver Robinson (602/712-7272)

ARKANSAS: **IRP Contact:** Office of Motor Vehicles (501/682-4651), Weigh Stations, Local Revenue Office, Wire Service
**IFTA Contact:** Marion Andrews (501/682-4814)

CALIFORNIA
**IRP Contact:** Department of Motor Vehicles-IRP Section (916/657-7971)
**IFTA Contact:** Cindy Silvia (916/324-2180)

COLORADO: **IRP Contact:** Port of Entry, Colorado State Patrol (303/757-9539), One Stop Shop Operation (303/205-5968)
**IFTA Contact:** Motor Carrier Services (303/205-5602)

CONNECTICUT: **IRP Contact:** Department of Motor Vehicles-IRP Section (860/263-5281), Wire Services, Weigh Stations
**IFTA Contact:** Richard LaRose (860/541-3216)

DELAWARE
**IRP Contact:** DE Motor Fuel Tax Administration (302/744-2701)
**IFTA Contact:** Information Services (302/744-2702)

FLORIDA
**IRP Contact:** Wire Services
**IFTA Contact:** Donna Thursby (850/488-6921)

GEORGIA
**IRP Contact:** Wire Services
**IFTA Contact:** Department of Revenue (404/657-1592)

IDAHO
**IRP Contact:** Motor Carrier One Stop Shop (208/334-8611),Weight and Vendor Stations
**IFTA Contact:** One Stop Shop (208/334-8692)

ILLINOIS
**IRP Contact:** Secretary of State- Commercial and Farm Truck Unit (217/785-1816), Wire Services
**IFTA Contact:** Motor Fuel Use Tax Section (217/785-1397)

INDIANA
**IRP Contact:** Bureau of Motor Vehicles, IRP Division (317/615-7200), Wire Services
**IFTA Contact:** Motor Carrier Services Division (317/615-7345)

IOWA
**IRP Contact:** Motor Carrier Services-IRP (515/237-3268), Regional Permit Centers, Vendor Services
**IFTA Contact:** Motor Carrier Services (515/237-2364)

KANSAS: **IRP Contact:** Motor Carrier Services Bureau (758/291-3384), Motor Carrier Inspection Stations, Central Permit Office
**IFTA Contact:** Motor Fuel Tax Section (785/291-3898)

KENTUCKY
**IRP Contact:** Division of Motor Carriers (502/564-4120)
**IFTA Contact:** Donnie Hammond (502/564-4154)

LOUISIANA
**IRP Contact:** IRP Unit Commercial Vehicle Center (225/925-6335), Motor Vehicle District Branch Offices, Ports of Entry, Wire Services
**IFTA Contact:** Cinde Fontenot (225/925-7652)

MAINE
**IRP Contact:** Commercial Vehicle Center-IRP Section (207/624-9000 ext. 52135)
**IFTA Contact:** Debra Stuart (207/624-9000, Ext. 52136)

MARYLAND
**IRP Contact:** Motor Carrier Services (410/787-2975)
**IFTA Contact:** Thomas M. Faulkner, Jr. (410/260-7138)

MASSACHUSETTS
**IRP Contact:** Department of Motor Vehicles (617/351-9320), Wire Services
**IFTA Contact:** Carmine Santoro (617/887-6774)

MICHIGAN
**IRP Contact:** Secretary of State-IRP Unit (517/322-1097), Wire Services
**IFTA Contact:** Department of Treasury (517/373-3183)

MINNESOTA
**IRP Contact:** MN Prorate Section (651/405-6161), Wire Services
**IFTA Contact:** General Information (651/405-6161)

MISSISSIPPI
**IRP Contact:** MS Department of Transportation Permit Division (601/359-1717), Port of Entry
**IFTA Contact:** Bill Kron (601/923-7152)

MISSOURI
**IRP Contact:** Highway Reciprocity Commission Office ( 573/751-6433)
**IFTA Contact:** Carol Corum (573/751-3671)

MONTANA
**IRP Contact:** Department of Transportation-Motor Carriers (406/444-7638), Port of Entry, Transceiver (1-800-527-0665), Permit Agents (Not available at all truck stops)
**IFTA Contact:** Carolyn Knuckles (406/444-7629)

NEBRASKA
**IRP Contact:** Vendor Stations
**IFTA Contact:** Motor Carrier Services Division (888/622-1222 or 402/471-4435)

NEVADA
**IRP Contact:** Wire Services
**IFTA Contact:** Tax Section (775/684-4711)

NEW HAMPSHIRE
**IRP Contact:** Wire Services
**IFTA Contact:** Road Toll Division-Fuel Permits (603/271-2311)

NEW JERSEY
**IRP Contact:** Wire Services
**IFTA Contact:** Thomas Iannotti (609/633-9408)

NEW MEXICO
**IRP Contact:** Motor Transportation Division-Enforcement Bureau (505/827-0365)
**IFTA Contact:** Mary Robins (505/827-1005)

NEW YORK
**IRP Contact:** Department of Motor Vehicles-IRP Bureau (518/473-5834), Wire Services
**IFTA Contact:** Department of Taxation and Finance (800/972-1233)

NORTH CAROLINA
**IRP Contact:** NC Motor Vehicles -IRP Section (919/861-3720), Weigh Stations, Ports of Entry
**IFTA Contact:** Tasha Adair (919/733-8179)

NORTH DAKOTA
**IRP Contact:** Ports of Entry
**IFTA Contact:** Connie Skager (701/328-2928)

OHIO
**IRP Contact:** Wire Services
**IFTA Contact:** Jamelin G. Wilson (614/466-3522)

OKLAHOMA
**IRP Contact:** Oklahoma Tax Commission-IRP Division (405/521-3036), Local Tag Agencies
**IFTA Contact:** Fredd Grimes (405/521-3246)

OREGON
**IRP Contact:** Ports of Entry, DMV Offices, Transceiver, CCIS
**IFTA Contact:** IFTA Section (503/373-1634)

PENNSYLVANIA
**IRP Contact:** Wire Services
**IFTA Contact:** Bureau of Motor Fuel Taxes (800/482-4382)

RHODE ISLAND
**IRP Contact:** Division of Motor Vehicles-IRP Services Section (401/728-6692)
**IFTA Contact:** Lori Saravo (401/222-6317)

SOUTH CAROLINA
**IRP Contact:** Department of Public Safety-IRP Section (803/737-6620)
**IFTA Contact:** Motor Carrier Services Section (803/737-6620)

SOUTH DAKOTA
**IRP Contact:** SD Permit Center (605/698-3925), Ports of Entry
**IFTA Contact:** Angie Lang (605/773-5335)

TENNESSEE
**IRP Contact:** Wire Services
**IFTA Contact:** Carol Luther (615/253-2335)

TEXAS
**IRP Contact:** Department of Transportation-IRP Branch (512/374-5250) or (1-800-299-1700), Title and Registration Division Regional Offices, Central Permit Office
**IFTA Contact:** Kirk Davenport (512/463-3849)

UTAH
**IRP Contact:** Ports of Entry, Highway Patrol
**IFTA Contact:** Kevin L. Park (801/297-7670)

VERMONT
**IRP Contact:** Department of Motor Vehicles-IRP (802/828-2071)
**IFTA Contact:** Commercial Vehicles Operation Unit (802/828-2070)

VIRGINIA
**IRP Contact:** State Corp. Commission (866/878-2582)
**IFTA Contact:** Motor Carriers Services (804/367-0558)

WASHINGTON
**IRP Contact:** Dept. of Transportation-IRP (360/902-3931), Ports of Entry,
**IFTA Contact:** IFTA Unit (360/664-1868)

WEST VIRGINIA
**IRP Contact:** Wire Services
**IFTA Contact:** Vicki Kidd (304/558-0700)

WISCONSIN
**IRP Contact:** Wire Services
**IFTA Contact:** Suzi Koplin (608/264-7231)

WYOMING
**IRP Contact:** Port of Entry, Highway Shop
**IFTA Contact:** Earleen Weaver (307/777-4842)

*Other US and State Taxes and Fees*

Single State Insurance Registration Program (SSRS)

States collect a federally authorized fee for the purpose of monitoring the status of the federal requirement for motor carrier financial responsibility. The Single State Insurance Registration Program (SSRS) imposes fees per power unit (truck-tractor or truck) based on the individual states in which the carrier's fleet of power units operates. The fees have been statutorily capped at no greater than $10 per vehicle per state, but vary depending on the state in which the carrier must file the application annually. This variation in fees is due to an historical carry-over from a previous program that allowed states to enter into bilateral agreements for the reciprocal reduction or elimination of these regulatory fees.

Some 38 US states participate in the program, with 12 states and the District of Columbia that do not participate in the application or fee collection process. Carriers in those 13 states are not exempt from the program; carriers that have their principal place of business in a state that does not participate in SSRS must file the annual application and pay the appropriate fees through one of the other participating states. The 13 states that do not participate include Alaska, Arizona, Delaware, District of Columbia, Florida, Hawaii, Maryland, Nevada, New Jersey, Oregon, Pennsylvania, Vermont, and Wyoming

The program is currently limited to those motor carriers deemed for-hire interstate carriers by the USDOT. Private carriers, over which USDOT has limited regulatory authority, and carriers operating solely intrastate (within the jurisdictional boundaries of one US state only), are excluded from SSRS requirements.

The program operates as a base-state program. Carriers with their principal place of business in a participating state must use that state as the state in which they make annual application for the payment of fees. Carriers with their principal place of business in a non-participating state must choose as their base state the state in which the carrier operates the greatest number of its fleet vehicles in the initial application year. The carrier's application is then a series of multiplications of the number of fleet vehicles multiplied by each of the states' fees. The carrier makes a single payment to the state of Texas, which is responsible for allocating the funds paid by the carrier to the respective states in which the carrier will operate during the SSRS registration year.

The process begins with the filing of an annual application between August 1 and November 30 for the next calendar year. The application includes general demographic data about the company and requires evidence of financial security that meets federal requirements (duplicating the filing requirement for proof of financial responsibility to obtain federal interstate operating authority), a listing of agents for service of process (another requirement that mirrors the federal requirement), and

the completion of the form identifying how many vehicles will operate in each of the participating SSRS states for the upcoming SSRS registration year.

As Mexico had no reciprocity with states for the payment of these fees, Mexican carriers likely will pay the maximum of $10 per vehicle per state, although no firm decision has been made whether to treat Mexican carriers registering in an SSRS participating state as if the Mexican carrier's principal place of business is the US state. If the Mexican carrier uses as the SSRS participating state one of the US border states of California, New Mexico, or Texas, and the selected US state allows the Mexican carrier the ability to partake of the variable fee schedule based on the historical reciprocity, the fees applicable to a Mexican carrier as an SSRS registrant would be as follows :

**SSRS Fees Per Vehicle by State**

| | California as Base | New Mexico as Base | Texas as Base | | California as Base | New Mexico as Base | Texas as Base |
|---|---|---|---|---|---|---|---|
| Alabama | 6.00 | 6.00 | 6.00 | Montana | 5.00 | 5.00 | 5.00 |
| Arkansas | 5.00 | 5.00 | 0 | Nebraska | 0.50 | 3.50 | 0.50 |
| California | 5.00 | 5.00 | 0 | New Hampshire | 10.00 | 10.00 | 10.00 |
| Colorado | 5.00 | 5.00 | 5.00 | New Mexico | 10.00 | 10.00 | 10.00 |
| Connecticut | 10.00 | 10.00 | 10.00 | New York | 10.00 | 10.00 | 10.00 |
| Georgia | 5.00 | 5.00 | 5.00 | North Carolina | 0 | 1.00 | 0 |
| Idaho | 2.00 | 2.00 | 2.00 | North Dakota | 10.00 | 10.00 | 10.00 |
| Illinois | 0 | 7.00 | 7.00 | Ohio | 5.00 | 5.00 | 5.00 |
| Indiana | 0 | 10.00 | 0 | Oklahoma | 7.00 | 7.00 | 0 |
| Iowa | 1.00 | 1.00 | 1.00 | Rhode Island | 8.00 | 8.00 | 8.00 |
| Kansas | 10.00 | 10.00 | 10.00 | South Carolina | 5.00 | 5.00 | 5.00 |
| Kentucky | 10.00 | 10.00 | 10.00 | South Dakota | 0 | 5.00 | 0 |
| Louisiana | 10.00 | 10.00 | 10.00 | Tennessee | 8.00 | 8.00 | 8.00 |
| Maine | 8.00 | 8.00 | 8.00 | Texas | 0 | 10.00 | 10.00 |
| Massachusetts | 1.00 | 10.00 | 10.00 | Utah | 6.00 | 6.00 | 6.00 |
| Michigan | 0 | 10.00 | 0 | Virginia | 10.00 | 10.00 | 10.00 |
| Minnesota | 0.45 | 5.45 | 0.45 | Washington | 10.00 | 10.00 | 10.00 |
| Mississippi | 10.00 | 10.00 | 10.00 | West Virginia | 3.00 | 3.00 | 3.00 |
| Missouri | 10.00 | 10.00 | 0 | Wisconsin | 5.00 | 5.00 | 5.00 |

Note: For purposes of this section, the use of the word "registration" identifies the process for the SSRS program, and is not meant to include vehicle registration as discussed under the International Registration Plan.

Upon payment to and processing by the base state, the carrier receives a "receipt" indicating payment of the fees and the identification of the states for which payment has been made. The carrier makes photocopies of the receipt in sufficient quantities to place a copy in each vehicle in the operational

fleet. The receipt document is replaced annually with the renewal of the application process and payment of fees.

Carriers that cross the border from Mexico into Arizona will have to select another state as the base state, since Arizona does not participate in SSRS. The selection process involves the carrier identifying the state in which it operates the next largest number of its fleet vehicles.

**State Mileage Taxes**

In addition to the vehicle registration fees described as IRP, fuel use taxes described as IFTA, and per-vehicle insurance registration fees described as SSRS, four states include a separate tax structure as a means to compensate the states for use of the highways. The states' taxes in this area are sometimes called third-structure taxes (first structure being vehicle registration fees, second structure being fuel taxes) but more commonly are referred to as "mileage taxes" for their unique feature of assessing tax based specifically on the mileage accrued by vehicle. The four states that have these taxes are: Kentucky, New Mexico, New York, and Oregon. Brief overviews of each state's tax and the fee/tax structures follow.

**Kentucky Weight-Distance Tax**

Kentucky requires the payment of a weight-distance tax of $0.0285 per mile for trucks and tractor-trailer combinations beginning at 60,000 lbs. gross vehicle weight. In addition, to identify itself to the Kentucky Revenue Cabinet (the agency that administers the weight-distance tax in Kentucky), carriers must meet certain tax-account-display requirements, either by means of a USDOT number (the account number issued to an interstate motor carrier upon completing the federal interstate operating authority requirements) or a "control number" issued by the Kentucky Revenue Cabinet. The display of the USDOT number or control number must meet certain visual display requirements as set by the Cabinet.

Carriers must file a tax report and pay the tax on a quarterly basis, by the last day of the first month following the close of the calendar quarter (i.e., April, July, October, and January).

New Mexico Use Fee

New Mexico's mileage tax is called the "use fee." All vehicles, regardless of their status in interstate commerce and type of equipment, with a gross vehicle weight exceeding 26,000 lbs. must pay the tax. However, if a carrier is not registered for vehicle registration purposes directly with New Mexico or through IRP for operations into New Mexico, the carrier must pay a trip permit fee in lieu of the use fee. The fees are as follows:

| Declared GVW | Use Fee (Cents per mile) | Declared GVW | Use Fee (Cents per mile |
|---|---|---|---|
| 26,001 – 28,000 | 0.797 | 54,001 – 56,000 | 1.975 |
| 28,001 – 30,000 | 0.860 | 56,001 – 58,000 | 2.071 |
| 30,001 – 32,000 | 0.924 | 58,001 – 60,000 | 2.166 |
| 32,001 – 34,000 | 0.987 | 60,001 – 62,000 | 2.261 |
| 34,001 – 36,000 | 1.051 | 62,001 – 64,000 | 2.358 |
| 36,001 – 38,000 | 1.114 | 64,001 – 66,000 | 2.453 |
| 38,001 – 40,000 | 1.211 | 66,001 – 68,000 | 2.548 |
| 40,001 – 42,000 | 1.306 | 68,001 – 70,000 | 2.643 |
| 42,001 – 44,000 | 1.401 | 70,001 – 72,000 | 2.740 |
| 44,001 – 46,000 | 1.497 | 72,001 – 74,000 | 2.841 |
| 46,001 – 48,000 | 1.593 | 74,001 – 76,000 | 2.946 |
| 48,001 – 50,000 | 1.688 | 76,001 – 78,000 | 3.055 |
| 50,001 – 52,000 | 1.784 | 78,001 and over | 3.168 |
| 52,001 – 54,000 | 1.879 | | |

In addition, New Mexico charges fees for its credentials to identify carrier vehicles as operating legally in New Mexico for purposes of use fee compliance. Fees include $5 for each vehicle operating in New Mexico, and $7 ($6 if the carrier is licensed under the provisions of IFTA) for each vehicle to obtain a cab card that is placed in the vehicle cab indicating compliance with the tax provisions.

The New Mexico Tax and Revenue Department is the agency to which a carrier applies for credentials and for payment of tax. The tax report and tax payment is due quarterly, on the 25th of the month following the close of the quarter (i.e., April 25, July 25, October 25, January 25). Companies with small liabilities (under $500 for the year) may file annually.

**New York Highway Use Tax**

The New York tax is called the "highway use tax." New York's tax covers vehicles (single trucks, tractor-trailer combinations) with a gross vehicle weight in excess of 18,000 lbs., but carriers whose operations include significant empty backhauls (trips through New York without loads) can take advantage of tax payment options that are calculated not on gross vehicle weight but rather on unladen weight (the weight of the tractor plus trailer only, assuming no cargo being carried).

New York imposes tax on all highway miles in the state, with the exception of miles on the New York State Thruway (a toll road) on which the carrier can evidence payment of tolls. New York also requires special multi-year credentials for the program, including special cab cards and decals for which New York charges on a vehicle-by-vehicle basis. For infrequent operations (10 or fewer trips per year), New York allows the purchase of a $25 trip permit for a single trip lasting no more than 72 hours in New York. For regular operations but smaller annual liabilities ($250), carriers can file the tax report and pay the tax liability annually. Otherwise, tax reports are due with tax payments on the last day of the month following the close of the calendar quarter (i.e., April 30, July 31, October 31, January 31). The New York State Department of Taxation and Finance, Miscellaneous Tax/Highway Use Tax Section, administers the highway use tax.

New York offers two options for calculating tax: the gross weight method (which includes a choice between a "straight-line" calculation or the "heaviest weight" calculation), or the unloaded weight method. The carrier must choose which option to use for calculating tax throughout the entire year for all vehicles in the fleet, even though the tax report is filed and tax liability is due quarterly. However, when a carrier chooses the gross weight option, the carrier can alternate between the straight-line calculation and the heaviest weight calculation options.

The "straight-line" calculation of the gross weight method requires the carrier to identify vehicles only by vehicle type (truck-tractor or straight truck) for those vehicles operating at a gross weight greater than 18,000 lbs. The alternative "heaviest weight" option allows the carrier to classify vehicles more precisely, depending on their use (hauling cargo or running empty) during the tax period. The classes of vehicles include: (1) the truck with the heaviest gross weight (hauling cargo); (2) the tractor with the heaviest gross weight (hauling cargo); (3) the truck with the heaviest unloaded weight, if different from (1); (4) the unladen tractor in combination with the heaviest unloaded weight, if different from (2); (5) the tractor with the heaviest unloaded weight when operated without trailers; (6) the truck-trailer combination with the heaviest gross weight (empty weight of truck plus empty weight of heaviest trailer plus heaviest load carried); and (7) the truck-trailer combination with the heaviest unloaded weight (empty weight of truck plus empty weight of heaviest trailer). The tax rate is applied to the mileage accrued by type of vehicle, its use (laden or unladen) during the tax period, and the weight of the vehicle(s).

**Gross Weight Method (Straight-Line or Heaviest Weight) – Single Trucks or Tractor-Trailer Combinations Carrying Cargo**

| Gross Weight (lbs.) | Tax ($US per mile) | Gross Weight (lbs.) | Tax ($US per mile) |
|---|---|---|---|
| 18,001 – 20,000 | 0.0084 | 48,001 – 50,000 | 0.0238 |
| 20,001 – 22,000 | 0.0098 | 50,001 – 52,000 | 0.0252 |
| 22,001 – 24,000 | 0.0112 | 52,001 – 54,000 | 0.0266 |
| 24,001 – 26,000 | 0.0126 | 54,001 – 56,000 | 0.0280 |
| 26,001 – 28,000 | 0.0133 | 56,001 – 58,000 | 0.0294 |
| 28,001 – 30,000 | 0.0140 | 58,001 – 60,000 | 0.0308 |
| 30,001 – 32,000 | 0.0147 | 60,001 – 62,000 | 0.0322 |
| 32,001 – 34,000 | 0.0154 | 62,001 – 64,000 | 0.0336 |
| 34,001 – 36,000 | 0.0161 | 64,000 – 66,000 | 0.0357 |
| 36,001 – 38,000 | 0.0168 | 66,001 – 68,000 | 0.0378 |
| 38,001 – 40,000 | 0.0175 | 68,001 – 70,000 | 0.0399 |
| 40,001 – 42,000 | 0.0182 | 70,001 – 72,000 | 0.0420 |
| 42,001 – 44,000 | 0.0196 | 72,001 – 74,000 | 0.0455 |
| 44,001 – 46,000 | 0.0210 | 74,001 – 76,000 | 0.0490 |
| 46,001 – 48,000 | 0.0224 | 76,001 – 78,000 | 0.0518 |
| | | 78,001 – 80,000 | 0.0546 |
| | | 80,001 and over | add $0.0028 for each 2000 lbs. |

**Gross Weight Method (Straight-Line or Heaviest Weight) –**

**Tractor-Trailer Combination with No Cargo**

| Empty Weight (lbs.) | Tax ($US per mile |
|---|---|
| 7,001 – 8,500 | 0.0084 |
| 8,501 – 10,000 | 0.0098 |
| 10,001 – 12,000 | 0.0112 |
| 12,001 – 14,000 | 0.0126 |
| 14,001 – 16,000 | 0.0133 |
| 16,001 – 18,000 | 0.0140 |
| 18,001 and over | add 0.0007 for each 2000 lbs. |

**Gross Weight Method (Straight-Line or Heaviest Weight) –**

**Truck-Trailer Combinations with No Cargo,**

**Empty Trucks, Tractors without Trailers**

| Empty Weight (lbs.) | Tax ($US per mile) |
|---|---|
| 18,001 – 20,000 | 0.0084 |
| 20,001 – 22,000 | 0.0098 |
| 22,001 – 24,000 | 0.0112 |
| 24,001 – 26,000 | 0.0126 |
| 26,001 – 28,000 | 0.0133 |
| 28,001 – 30,000 | 0.0140 |
| 30,001 and over | add 0.0007 for each 2000 lbs. |

The other alternative for calculating tax is the unloaded weight method, that uses the empty weight of the straight truck or truck-tractor only, as multiplied by the mileage accrued in New York and by the tax rate for each vehicle at the identified empty weight.

| TRUCKS Unloaded Weight (lbs.) | Tax ($US per mile) |
|---|---|
| 8,001 – 9,000 | 0.0056 |
| 9,001 – 10,000 | 0.0070 |
| 10,001 – 11,000 | 0.0098 |
| 11,001 – 12,000 | 0.0112 |
| 12,001 – 13,000 | 0.0126 |
| 13,001 – 14,000 | 0.0140 |
| 14,001 – 15,000 | 0.0154 |
| 15,001 – 17,500 | 0.0168 |
| 17,501 – 20,000 | 0.0198 |
| 20,001 – 22,500 | 0.0252 |
| 22,501 – 25,000 | 0.0308 |
| 25,001 and over | 0.0378 |

| TRACTORS Unloaded Weight (lbs.) | Tax ($US per mile) |
|---|---|
| 4,001 – 5,500 | 0.0084 |
| 5,501 – 7,000 | 0.0140 |
| 7,001 – 8,500 | 0.0196 |
| 8,500 – 10,000 | 0.0252 |
| 10,001 – 12,000 | 0.0350 |
| 12,001 and over | 0.0462 |

## Oregon Axle-Mile Tax

Oregon's mileage tax version is called the "axle-mile tax". Oregon taxes all commercial vehicles (single trucks, tractor-trailer combinations) over 26,000 lbs. GVW based on the maximum gross vehicle weight and the taxable miles accrued in Oregon. The tax starts at $0.0415 per mile for a vehicle 26,001 – 28,000 lbs. GVW, and increases in 2000-lb. Increments to $0.1365 per mile for a vehicle 78,000 – 80,000 lbs. GVW. Oregon makes available trip permits in lieu of payment of the axle-mile tax for very limited operations into Oregon during a year.

| Maximum GVW | Use Fee ($US per mile) | Maximum GVW | Use Fee ($US per mile |
|---|---|---|---|
| 26,001 – 28,000 | .0364 | 54,001 – 56,000 | .031 |
| 28,001 – 30,000 | .0386 | 56,001 – 58,000 | .0658 |
| 30,001 – 32,000 | .0403 | 58,001 – 60,000 | .0688 |
| 32,001 – 34,000 | .0421 | 60,001 – 62,000 | .0723 |
| 34,001 – 36,000 | .0438 | 62,001 – 64,000 | .0763 |
| 36,001 – 38,000 | .0460 | 64,001 – 66,000 | .0807 |
| 38,001 – 40,000 | .0478 | 66,001 – 68,000 | .0864 |
| 40,001 – 42,000 | .0495 | 68,001 – 70,000 | .0925 |
| 42,001 – 44,000 | .0513 | 70,001 – 72,000 | .0986 |
| 44,001 – 46,000 | .0530 | 72,001 – 74,000 | .1043 |
| 46,001 – 48,000 | .0548 | 74,001 – 76,000 | .1096 |
| 48,001 – 50,000 | .0566 | 76,001 – 78,000 | .1149 |
| 50,001 – 52,000 | .0587 | 78,001 and over | .1197 |
| 52,001 – 54,000 | .0609 | | |

Note: Higher rates apply at weights in excess of 80,000 lbs. GVW

Oregon requires a carrier to obtain a "receipt" for each vehicle operating into Oregon. The receipt evidences the maximum gross vehicle weight that single vehicle or combination will operate at during the calendar year. Oregon charges $5 for each vehicle receipt, which must be carried in the vehicle at all times. Oregon also requires a carrier to obtain a special license plate for each vehicle operating into Oregon. Plates are provided at no charge.

Payment of the tax is on a quarterly basis, due May 31, August 31, November 30, and February 28. Oregon allows those carriers with small tax liabilities ($3600 or less) to file and pay tax annually.

**State Income Taxes**

Mexican carriers that operate into the United States may also be liable for state income taxes whether they have a fixed location in a US state or not. The following states have income taxes that are apportioned (oftentimes using the carrier's IRP percentage as a basis for applying tax) and are moderately to extremely aggressive in their attention to interstate carriers not based in their respective state: Michigan (its tax is called a single business tax), New York (Sec. 183 franchise tax), Ohio (franchise tax), Pennsylvania (capital stock and foreign franchise tax), and South Carolina (income tax). Other states have income taxes, as well, and may or may not assess motor carriers as a special class or as any other general business, but those states typically assess tax if the company has property (real estate), payroll (employees), or sales in the state.

The "nexus" or connection to the state for a motor carrier's taxation purposes may vary somewhat, but generally equates to a certain threshold number of trips into or through the state, or a threshold of miles traveled into or through the state, as accumulated by all fleet vehicles during the course of a year. The threshold number of trips can be as few as 12-25, the threshold of miles as few as 25,000, again as accumulated by all fleet vehicles during a year.

Income taxes assessed against general business companies generally are apportioned based on property, payroll and/or sales in the state as a percentage of property, payroll and/or sales nationwide. However, since interstate motor carriers may not have property, payroll or sales in a given state, the state finds other means to assess tax. Once the nexus is established, the percentage of miles traveled in the state as a percentage of travel nationwide, or the total number of trips into and through the state as a percentage of total trips nationwide, is applied to total income and then multiplied by the state tax rate to determine tax liability.

Carriers meeting or expecting to meet these thresholds should contact the various state tax departments for the appropriate forms and instructions on how to comply.

| Company Name | Telephone - Conta | elephone - Conta | Main Telephone |
|---|---|---|---|
| Single State Insurance Registration (SSRS) | | | |
| Alabama Public Service Commission | | | (334) 242-5176 |
| Arkansas Highway and Transportation Dept | | | (501) 569-2358 |
| California Department of Motor Vehicles | | | (916) 657-6636 |
| Colorado Public Utilities Commission | | | (303) 894-2000 |
| Connecticut Dept. of Transportation | | | (860) 566-5586 |
| Georgia Departmant of Motor Vehicle Safety | | | (404) 362-6484 |
| Idaho Department of Transportation | | | (208) 334-8611 |
| Illinois Commerce Commission | | | (217) 782-4654 |
| Indiana Department of Revenue | | | (317) 232-2744 |
| Iowa Department of Transportation | | | (515) 237-3224 |
| Kansas Corporation Commission | | | (785) 271-3115 |
| Kentucky Transportation Cabinet | | | (502) 564-4127 |
| Louisiana Public Service Commission | | | (225) 342-4414 |
| Maine Bureau of Motor Vehicles | | | (207) 287-8633 |
| Massachusetts Dept of Telecommunications | | | (617) 305-3559 |
| Michigan Public Service Commission | | | (517) 241-6043 |
| Minnesota Department of Transportation | | | (651) 405-6060 |
| Mississippi Public Service Commission | | | (601) 961-5444 |
| Montana Department of Transportation | | | (406) 444-6130 |
| Nebraska Public Service Commission | | | (402) 471-4435 |
| New Hampshire Department of Safety | | | (603) 271-2447 |
| New Mexico State Corporation Commission | | | (505) 827-4519 |
| New York Department of Transportation | | | (518) 457-7194 |
| North Carolina Department of Transportation | | | (919) 861-3720 |
| North Dakota Department of Motor Vehicles | | | (701) 328-2725 |
| Ohio Public Utilities Commission | | | (614) 466-3392 |
| Oklahoma Corporation Commission | | | (405) 521-2251 |
| Rhode Island Public Utilities Commission | | | (401) 941-4500 |
| South Carolina Department of Public Safety | | | (803) 737-6308 |
| South Dakota Public Utilities Commission | | | (605) 773-5280 |
| Tennessee Department of Safety | | | (615) 741-2974 |
| Texas Department of Transportation | | | (800) 299-1700 |
| Utah Department of Transportation | | | (801) 965-4279 |
| Virginia Department of Motor Vehicles | | | (804) 7367-9157 |
| Washington Utilities and Transportation Comm | | | (360) 664-1222 |
| West Virginia Public Service Commission | | | (304) 340-0346 |
| Wisconsin Department of Transportation | | | (608) 266-1356 |

| | |
|---|---|
| State Mileage Taxes | |
| Kentucky Revenue Cabinet | (502) 564-4540 |
| New Mexico Tax and Revenue Department | (505) 827-2265 |
| New York Department of Taxation and Revenue | (518)457-3653 |
| Oregon Public Utilities Commission | (503) 378-6663 |

| State Income Taxes | |
|---|---|
| Michigan Department of Treasury | (517) 373-3200 |
| New York Department of Taxation and Finance | (800) 972-1233 |
| Ohio Department of Taxation | (614) 433-7645 |
| Pennsylvania Department of Revenue | (717) 787-1064 |
| South Carolina Department of Revenue | (803) 895-5705 |

# FEDERAL VEHICLE WEIGHTS AND DIMENSIONS REQUIREMENTS

**General Information**: In the United States, the Federal, State and some municipal governments have the authority to control truck size and weight. The Federal government has the authority to establish truck size and weight maximums only on the Interstate Highway system and on roadways on most Federal properties (National Forests, Indian Reservations, etc.). The states, have jurisdiction over most all non-Interstate highways. For some cities, the states have given the local government some truck size and weight regulation authority.

However, the Surface Transportation Assistance Act of 1982 (STAA) established some standards for domestic interstate trailer operations for the National Network. The National Network is a system of interconnecting highways, chosen predominantly by the states, over which most intercity truck traffic travels. It includes most all of the Interstate highway system and the majority of major arterials.. This act permitted twin trailer trucks with individual trailer lengths of up to 28.5 feet (8.69 meters), and required the states to allow 48-foot (14.63 meters) long semitrailers and vehicles 8.5 feet (2.60 meters) wide on major roads, and 80,000-pound (36.29 metric tons) trucks on nearly all Interstate Highways. Note that the law set the *minimums* that states could set for *maximums* for truck size and weight. The intent of the law was to increase the efficiency of freight transportation. The law does not place restrictions on vehicle height. Length limits apply only to the semitrailer and not to the tractor.

All states must allow the STAA-dimensioned vehicles and containers to operate over the National Network . That is, states must allow at least 48-foot long semitrailers and unlimited overall length for either twins or single trailer combinations on federally designated roads and access roads. Each state, however, may also designate the access highways that must be used to and from the Interstate Highway System. The states have latitude in determining whether or not to authorize overweight or overlength movements by issuing annual, monthly or single trip permits. Many states, particularly those with major port facilities, do issue such permits. The Intermodal Surface Transportation Efficiency Act of 1991 (ISTEA) restricted the operation of longer combination vehicles with overall vehicle lengths greater than those authorized by the STAA. Specifically, it limited the use of double and triple trailer combinations with gross weights in excess of 80,000 pounds to the states in which they were actually operating on June 1, 1991. The Act prohibits the expansion of routes or the removal of operating restrictions after that date.

Federal vehicle weights and dimensions requirements are found in Part 658 of Title 23 of the U.S. Code of Federal Regulations.

**STAA uniform weight, length, and width requirements for vehicles using the National Network:**

**Width:** 102 inches

**Height:** None specified

**Length:** STAA permits twin-trailer trucks with individual trailer lengths of up to 28.5 feet (8.69 meters); single semitrailers of at least 48 ft. (14.63 m)*; length limits apply only to the trailers and semitrailers and not to the overall length of tractor, trailer, and semitrailer combinations.

| | |
|---|---|
| **Weight: One axle** | - 20,000 lbs. |
| **Tandem axles** | - 34,000 lbs. |
| **Gross allowable weight** | - 80,000 lbs. |

**53-Foot Trailers**

Fifty-three foot trailers are often used for transporting manufactured goods within the United States. Overall, they represent about 30 percent of all trailers operating in the United States, except Alaska and the District of Columbia. Their use is also permitted in five western Canadian provinces. Mexico recently increased tractor-semitrailer length limits on a designated network of major roads to 23 meters.

**State Standards**

All states have the authority to set truck size and weight maximums higher than the smallest maximums described in the 1982 STAA for all non-Interstate state highways. In some states, officials may grant monthly and annual permits that allow even greater size and weight. Additionally some states have "grandfather rights," that allow the state to retain size and weight limits that pre-dated the Federal legislation that set the limits for the Interstate system, even if those limits were greater than the Federal limits.

The Appendix that follows shows a side by side comparison of truck size and weight limits. This Appendix should be used only as a guide.

Motor carrier operators should contact each individual State Department of Transportation to determine unrestricted legal and permit granted truck size and weight maximums.

**Standards Compatibility**

The three NAFTA countries are committed to developing more compatible land transportation safety standards, to the extent possible through the NAFTA Land Transportation Standards

Subcommittee (LTSS), which established a work program for achieving such compatibility. Commercial vehicle weight and dimension requirements will continue to be analyzed.

In the United States, proposals to modify existing requirements will be considered through the normal regulatory and public comment processes. Any changes to existing statutory requirements, such as truck weight restrictions and limitations on the use of longer combination vehicles, would require Congressional legislative action.

# FEDERAL VEHICLE WEIGHTS AND DIMENSIONS REQUIREMENTS FOR BUSES

Federal vehicle weights and dimensions requirements for buses, which also are found in Part 658 of Title 23 of the U.S. Code of Federal Regulations, are summarized below.

**Federal Weight Limitations for Buses:** Axle and gross vehicle weight limitations apply to intercity motor coaches on the Interstate Highway System. Those buses must not exceed 20,000 pounds on a single axle, 34,000 pounds on tandem axles, or 80,000 pounds gross vehicle weight. Transit buses currently are exempt from Federal gross vehicle weight and axle weight limits

**Federal Dimension Standards for Buses:** The Surface Transportation Assistance Act of 1982 (STAA) established certain federal dimension standards for buses on the Interstate Highway System and designated primary highways (the National Network). All states must allow buses of 45 feet in length and 102 inches in width to operate on the National Network, and must allow reasonable access to and from the National Network to points of loading and unloading.

Individual states may have additional size and weight rules that apply to buses. Passenger carriers should contact each state where they plan to operate to ensure compliance with state requirements.

# APPENDIX

North American Free Trade Agreement
Land Transportation Standards Subcommittee
Working Group 2 - Vehicle Weights and Dimensions

## "Side by Side" Comparison of Regulated Weight and Dimension Limits

**Side by Side Update May 2001 – Notes and Observations**

In October 1997 LTSS 2 completed and released the "side by side" report which compared the regulated weight and dimension limits for the four vehicle configurations considered priority candidates for regulatory harmonization. The federal, state and provincial limits for these configurations were assembled in tabular form.

In October 2000, it was agreed by LTSS 2 that these tables should be updated to reflect changes which have occurred in the past four years.

**Summary of Changes - Canada:**

*Québec*

In November 1998 Québec introduced a wide range of changes in regulated weight and dimension limits, including phasing out of the use of liftable axles. For the four configurations depicted in the summary tables, the changes include:

- a weight limit of 18,000 kg for all tandem axle groups with spreads between 1.2 and 1.85 m
- weight limits of 21,000 kg, 24,000 kg and 26,000 kg for tridem axle groups (depending upon spread)

*Manitoba, Saskatchewan, Alberta and British Columbia*

In late 1999 the western provinces increased the box length limit on A Train doubles to 20 m (from 18.5m)

*Ontario:*

On January 1, 2001 changes in a several regulated weight limits were introduced in Ontario, as part of a regulatory harmonization agreement reached with Quebec. For the four configurations under review by LTSS 2 these changes include:

- an increase in the lowest weight limit for close spaced tandem axle groups on tractors (and tandem axles on trailers in a tractor-semitrailer configuration) to 18,000 kg.
- an increase in the weight limit for wide spread (3.7 m) tridem axle groups to 25,500 kg (this limit is expected to be increased to 26,000 kg in 2005)

*Alberta:*

On April 1, 2001 Alberta increased the weight limit for medium spread (3.0 - 3.6 m) tridems to 24,000 kg (from 23,000).

*New Brunswick, Nova Scotia, PEI and Newfoundland*

As part of an agreement to establish a uniform regulatory regime for weight and dimension limits within the region, the Atlantic Provinces are expected to introduce changes in the summer of 2001 as follows:

- a weight limit of 18,000 kg for all tandem axle groups with spreads between 1.2 and 1.85 m
- weight limits of 21,000 kg, 24,000 kg and 26,000 kg for tridem axle groups, depending upon spread
- an increase in the box length limit for A Train doubles to 20 m (from 18.5 m)

**Summary of Changes - United States:**

No changes have occurred in the regulated size and weight limits since the original tabular summary was prepared. However, several corrections in the depicted state limits have been incorporated.

**Summary of Changes - Mexico:**

In September 1999 SCT issued revised draft standards for vehicle weights and dimensions which included changes which affect the tabular summaries in the following areas:

- establishment of a new classification of highways "ET", in addition to the existing A, B, C and D classifications
- elimination of the overall length limit on tractor semitrailers; replaced by a limit on the length of the semitrailer within the combination
- introduction of a semitrailer length limit of 16.16 m on ET Class highways, and 14.63 m semitrailer length limit on Class A & B Highways
- increase in the overall length limit for A Train Doubles to 31 m on Class ET and A routes

**Tractor Semitrailer - Five Axles**

1.

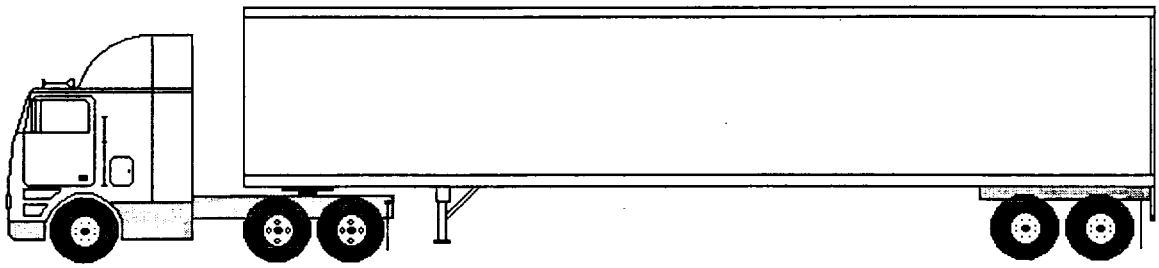

## Weight and Dimension Limit Summary:

### Dimension Limits

| | *National Network* | | |
|---|---|---|---|
| *Summary* | *No* | *Lowest Limit* | *Highest Limit* |
| **Overall Length** | 12 | 23.0 | 23.0 |
| **Overall Width** | 64 | 2.59 | 2.74 |
| **Overall Height** | 64 | 3.96 | 4.42 |
| **Tractor Wheelbase** | 12 | 6.2 | 6.2 |
| **Trailer Length** | 61 | 14.63 | 18.29 |
| **Trailer Wheelbase (max)** | 33 | 11.28 | 13.11 |
| **Rear Overhang** | 17 | 35% | 1.83 |

### Weight Limits

| | *National Network* | | |
|---|---|---|---|
| *Summary* | *No* | *Lowest Limit* | *Highest Limit* |
| **Steering Axle** | 65 | 4,990 | 10,206 |
| **Tractor Tandem** | 65 | 15,442 | 19,958 |
| **Trailer Tandem** | 65 | 15,442 | 19,958 |
| **GCW** | 65 | 36,288 | 44,000 |

**Legend:**

No. = Number of jurisdictions which have a limit; maximum possible is 65.

National System = National truck network in US, primary system in Canada and Class ET, A & B highways in Mexico

## Observations - Compatibility Issues

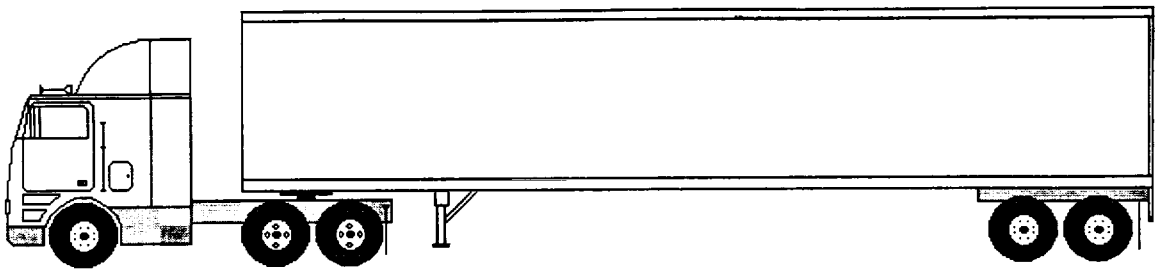

### *Dimension Limits*

| | |
|---|---|
| **Overall Length** | · *no overall length limit (USA & Mexico) versus length restriction (Canada)*<br>· *different overall length limits (Canada vs Mexico vs US State limits)* |
| **Overall Height** | · *three points in range: 4.15 m (13.5'), 4.25 m (13.9') & 4.27 m (14')* |
| **Trailer Length** | · *different trailer length limits; although 53' is widely accepted* |
| **Tractor Wheelbase** | · *only Canada controls directly* |
| **Trailer Wheelbase** | · *Canada and some US states control* |
| **Trailer Tandem Spread** | · *USA encourages wider spread for higher weight*<br>· *Canada limits spread to 1.85 m*<br>· *Mexico neutral* |
| **Other Issues:** Additional controls: | · *kingpin setback (Canada)*<br>· *effective rear overhang (Canada)*<br>· *track width (Canada)* |

### *Weight Limits*

| | |
|---|---|
| **Steering Axle** | · *two camps; 5500 kg versus full single axle weight (9,000 to 10,000 kg)* |
| **Drive Tandem** | · *range of limits throughout NAFTA*<br>· *more weight for tractor tandem than trailer*<br>· *extra weight for specific suspension type* |
| **Trailer Tandem** | · *range of limits in place*<br>· *greater spread for higher weight vs same weight for any spread* |
| **Gross Vehicle Weight** | · *US has bridge formula cap*<br>· *Canada limits GVW based on axle weights*<br>· *Mexico limit by bridge formula; different for different routes* |

# Summary: Tractor - Semitrailer (5 axles) - National Networks

| | Overall Length (m) | Overall Width (m) | Overall Height (m) | Tractor Wheelbase - max | Trailer Length - max | Trailer Wheelbase (max) | Rear Overhang - max | Tandem Spread - min | Tandem Spread - max | Steering Axle - max | Tractor Tandem - max | Trailer Tandem - max | GCW |
|---|---|---|---|---|---|---|---|---|---|---|---|---|---|
| **Mexico** | | 2.6 | 4.25 | | 16.16 | | | | | 6,500 | 19,500 | 18,000 | 44,000 |
| Class A&B Routes | | 2.6 | 4.25 | | 14.63 | | | | | 6,500 | 19,500 | 18,000 | 44,000 |
| **Canada** | | | | | | | | | | | | | |
| British Columbia | 23.0 | 2.60 | 4.15 | 6.20 | 16.20 | 12.50 | 35% | 1.20 | 1.85 | 5,500 | 17,000 | 17,000 | 39,500 |
| Alberta | 23.0 | 2.60 | 4.15 | 6.20 | 16.20 | 12.50 | 35% | 1.20 | 1.85 | 5,500 | 17,000 | 17,000 | 39,500 |
| Saskatchewan | 23.0 | 2.60 | 4.15 | 6.20 | 16.20 | 12.50 | 35% | 1.20 | 1.85 | 5,500 | 17,000 | 17,000 | 39,500 |
| Manitoba | 23.0 | 2.60 | 4.15 | 6.20 | 16.20 | 12.50 | 35% | 1.20 | 1.85 | 5,500 | 17,000 | 17,000 | 39,500 |
| Ontario | 23.0 | 2.60 | 4.15 | 6.20 | 16.20 | 12.50 | 35% | 1.20 | 1.85 | 9,000 | 18,000 | 18,000 | 41,500 |
| Quebec | 23.0 | 2.60 | 4.15 | 6.20 | 16.20 | 12.50 | 35% | 1.20 | 1.85 | 5,500 | 18,000 | 18,000 | 41,500 |
| New Brunswick | 23.0 | 2.60 | 4.15 | 6.20 | 16.20 | 12.50 | 35% | 1.20 | 1.85 | 5,500 | 18,000 | 18,000 | 41,500 |
| Nova Scotia | 23.0 | 2.60 | 4.15 | 6.20 | 16.20 | 12.50 | 35% | 1.20 | 1.85 | 5,500 | 18,000 | 18,000 | 41,500 |
| Prince Edward Island | 23.0 | 2.60 | 4.15 | 6.20 | 16.20 | 12.50 | 35% | 1.20 | 1.85 | 5,500 | 18,000 | 18,000 | 41,500 |
| Newfoundland | 23.0 | 2.60 | 4.15 | 6.20 | 16.20 | 12.50 | 35% | 1.20 | 1.85 | 5,500 | 18,000 | 18,000 | 41,500 |
| Yukon | 23.0 | 2.60 | 4.20 | 6.20 | 16.20 | 12.50 | 35% | 1.20 | 1.85 | 5,500 | 17,000 | 17,000 | 39,500 |
| Northwest Terr. | 23.0 | 2.60 | 4.20 | 6.20 | 16.20 | 12.50 | 35% | 1.20 | 1.85 | 5,500 | 17,000 | 17,000 | 39,500 |
| **United States** | | 2.59 | | | | | | | | 9,072 | 15,422 | 15,422 | 36,288 |
| Alabama | | 2.59 | 4.11 | | 17.37 | 12.5 | 1.52 | 1.01 | 2.44 | 9,072 | 15,422 | 15,422 | 36,288 |
| Alaska | | 2.59 | 4.27 | | 14.63 | | | 0.91 | 3.05 | 5,443 | 17,237 | 17,237 | 36,288 |
| Arizona | | 2.59 | 4.27 | | 17.53 | | | 1.01 | 2.44 | 9,072 | 15,422 | 15,422 | 36,288 |
| Arkansas | | 2.59 | 4.11 | | 16.31 | | | 1.01 | 2.44 | 5,443 | 15,422 | 15,422 | 36,288 |
| California | | 2.59 | 4.27 | | 16.15 | 12.19 | | 1.01 | 2.44 | 5,670 | 15,422 | 15,422 | 36,288 |
| Colorado | | 2.59 | 3.96 | | 17.47 | | | 1.01 | 2.44 | 9,072 | 16,330 | 16,330 | 36,288 |
| Connecticut | | 2.59 | 4.11 | | 16.15 | | 1.22 | 1.01 | 2.44 | 5,443 | 16,330 | 16,330 | 36,288 |
| Delaware | | 2.59 | 4.11 | | 16.15 | | 1.83 | 1.01 | 2.44 | 9,072 | 15,422 | 15,422 | 36,288 |
| Dist. of Columbia | | 2.59 | 4.11 | | 14.63 | | | 1.01 | 2.44 | 9,072 | 15,422 | 15,422 | 36,288 |
| Florida | | 2.59 | 4.11 | | 16.15 | 12.5 | 1.22 | 1.01 | 2.44 | 5,489 | 19,958 | 19,958 | 36,288 |
| Georgia | | 2.59 | 4.11 | | 16.15 | 12.5 | | 1.01 | 2.44 | 8,165 | 15,422 | 15,422 | 36,288 |
| Hawaii | | 2.74 | 4.27 | | | | | 1.01 | 2.44 | 10,206 | 15,422 | 15,422 | 39,917 |
| Idaho | | 2.59 | 4.27 | | 16.15 | | | 1.01 | 2.44 | 5,443 | 15,422 | 15,422 | 36,288 |
| Illinois | | 2.59 | 4.11 | | 16.15 | 12.95 | | 1.01 | 2.44 | 9,072 | 15,422 | 15,422 | 36,288 |
| Indiana | | 2.59 | 4.11 | | 16.15 | 12.34 | | 1.01 | 2.44 | 7,258 | 15,422 | 15,422 | 36,288 |
| Iowa | | 2.59 | 4.11 | | 16.15 | | | 1.01 | 2.44 | 9,072 | 15,422 | 15,422 | 36,288 |
| Kansas | | 2.59 | 4.27 | | 18.14 | | | 1.01 | 2.44 | 9,072 | 15,422 | 15,422 | 36,288 |
| Kentucky | | 2.59 | 4.11 | | 16.15 | | | 1.01 | 2.44 | 5,443 | 15,422 | 15,422 | 36,288 |
| Louisiana | | 2.59 | 4.11 | | 18.14 | | | 1.01 | 2.44 | 5,897 | 15,422 | 15,422 | 36,288 |
| Maine | | 2.59 | 4.11 | | 16.15 | 13.11 | | 1.22 | 2.44 | 5,443 | 17,237 | 17,237 | 36,288 |
| Maryland | | 2.59 | 4.11 | | 16.15 | 12.5 | | 1.01 | 2.44 | 5,443 | 15,422 | 15,422 | 36,288 |
| Massachusetts | | 2.59 | 4.11 | | 16.15 | | | 1.01 | 2.44 | 7,258 | 16,330 | 16,330 | 36,288 |
| Michigan | | 2.59 | 4.11 | | 16.15 | 12.5 | | 1.01 | 2.44 | 6,350 | 15,422 | 15,422 | 36,288 |
| Minnesota | | 2.59 | 4.11 | | 16.15 | 12.5 | | 1.01 | 2.44 | 5,443 | 15,422 | 15,422 | 36,288 |
| Mississippi | | 2.59 | 4.11 | | 16.15 | | | 1.01 | 2.44 | 4,990 | 15,422 | 15,422 | 36,288 |
| Missouri | | 2.59 | 4.27 | | 16.15 | | | 1.01 | 2.44 | 9,072 | 15,422 | 15,422 | 36,288 |
| Montana | | 2.59 | 4.27 | | 16.15 | | | 1.01 | 2.44 | 5,443 | 15,422 | 15,422 | 36,288 |
| Nebraska | | 2.59 | 4.42 | | 16.15 | | | 1.01 | 2.44 | 9,072 | 15,422 | 15,422 | 36,288 |
| Nevada | | 2.59 | 4.27 | | 16.15 | | | 1.01 | 2.44 | 5,443 | 15,422 | 15,422 | 36,288 |
| New Hampshire | | 2.59 | 4.11 | | 16.15 | 12.5 | | 1.01 | 2.44 | 9,072 | 15,422 | 16,330 | 36,288 |
| New Jersey | | 2.59 | 4.11 | | 16.15 | 12.5 | | 1.01 | 2.44 | 7,258 | 15,422 | 15,422 | 36,288 |
| New Mexico | | 2.59 | 4.27 | | 17.53 | | | 1.01 | 2.74 | 5,443 | 15,568 | 15,568 | 39,191 |
| New York | | 2.59 | 4.11 | | 17.53 | 12.5 | | 1.01 | 2.44 | 10,161 | 16,330 | 16,330 | 36,288 |
| North Carolina | | 2.59 | 4.11 | | 16.15 | 12.5 | | 1.01 | 2.44 | 9,072 | 17,237 | 17,237 | 36,288 |
| North Dakota | | 2.59 | 4.27 | | 16.15 | | | 1.01 | 2.44 | 4,990 | 15,422 | 15,422 | 38,556 |
| Ohio | | 2.59 | 4.11 | | 16.15 | | | 1.01 | 2.44 | 5,897 | 15,422 | 15,422 | 36,288 |
| Oklahoma | | 2.59 | 4.11 | | 18.14 | | | 1.01 | 2.44 | 5,897 | 15,422 | 15,422 | 36,288 |
| Oregon | | 2.59 | 4.27 | | 16.15 | | | 1.01 | 2.44 | 5,443 | 15,422 | 15,422 | 36,288 |
| Pennsylvania | | 2.59 | 4.11 | | 16.15 | | | 1.01 | 2.44 | 7,258 | 16,330 | 16,330 | 36,288 |
| Rhode Island | | 2.59 | 4.11 | | 16.15 | | 1.83 | 1.01 | 2.44 | 10,161 | 16,330 | 16,330 | 36,288 |
| South Carolina | | 2.59 | 4.11 | | 16.15 | 12.5 | | 1.01 | 2.44 | 9,072 | 17,963 | 17,963 | 36,560 |
| South Dakota | | 2.59 | 4.27 | | 16.15 | | | 1.01 | 2.44 | 5,443 | 15,422 | 15,422 | 36,288 |
| Tennessee | | 2.59 | 4.11 | | 16.15 | 12.5 | | 1.01 | 2.44 | 9,072 | 15,422 | 15,422 | 36,288 |
| Texas | | 2.59 | 4.27 | | 17.98 | | | 1.01 | 2.44 | 5,897 | 15,422 | 15,422 | 36,288 |
| Utah | | 2.59 | 4.27 | | 16.15 | 12.34 | | 1.01 | 2.44 | 5,443 | 15,422 | 15,422 | 36,288 |
| Vermont | | 2.59 | 4.11 | | 16.15 | 12.5 | | 1.07 | 2.44 | 5,443 | 16,330 | 16,330 | 36,288 |
| Virginia | | 2.59 | 4.11 | | 16.15 | 11.28 | | 1.01 | 2.44 | 5,897 | 15,422 | 15,422 | 36,288 |
| Washington | | 2.59 | 4.27 | | 16.15 | | | 1.01 | 2.44 | 5,443 | 15,422 | 15,422 | 36,288 |
| West Virginia | | 2.59 | 4.11 | | 16.15 | 11.28 | | 1.01 | 2.44 | 9,072 | 15,422 | 15,422 | 36,288 |
| Wisconsin | | 2.59 | 4.11 | | 16.15 | 12.5 | | 1.01 | 2.44 | 5,897 | 15,422 | 15,422 | 36,288 |
| Wyoming | | 2.59 | 4.27 | | 18.29 | | | 1.01 | 2.44 | 6,804 | 16,330 | 16,330 | 39,463 |

## 11. Tractor Semitrailer Configuration - Six Axles

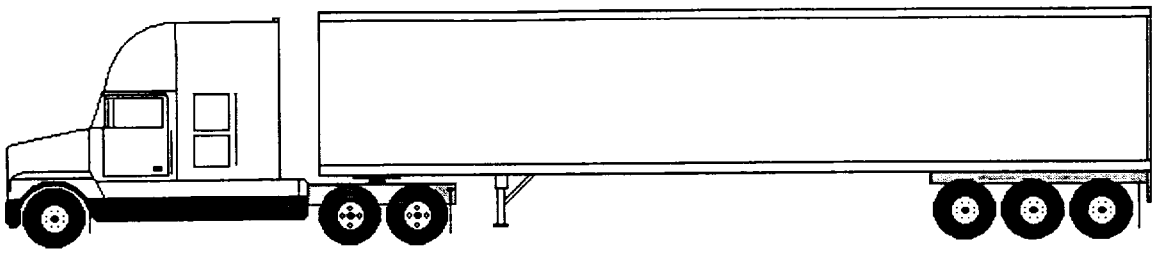

**Current Weight and Dimension Limit Summary:**

### Dimension Limits

| | *National Network* | | |
|---|---|---|---|
| *Summary* | ***No*** | ***Lowest Limit*** | ***Highest Limit*** |
| **Overall Length** | 13 | 19.8 | 23 |
| **Overall Width** | 65 | 2.59 | 2.74 |
| **Overall Height** | 64 | 3.96 | 4.42 |
| **Tractor Wheelbase** | 12 | 6.2 | 6.2 |
| **Trailer Length** | 62 | 14.63 | 18.29 |
| **Trailer Wheelbase (max)** | 33 | 11.28 | 13.11 |
| **Rear Overhang** | 17 | 35% | 1.8 |

### Weight Limits

| | *National Network* | | |
|---|---|---|---|
| *Summary* | ***No*** | ***Lowest Limit*** | ***Highest Limit*** |
| **Steering Axle** | 65 | 4,990 | 10,206 |
| **Tractor Tandem** | 65 | 15,442 | 19,958 |
| **Tridem 2.4 - 3.0 m** | 65 | 15,060 | 24,000 |
| **Tridem 3.1 - 3.6 m** | 65 | 16,148 | 24,000 |
| **Tridem - 3.6 m** | 65 | 16,330 | 26,000 |
| **GCW with 2.4 m Tridem** | 65 | 36,288 | 48,500 |
| **GCW with 3.0 m Tridem** | 65 | 36,288 | 49,000 |
| **GCW with 3.6 m Tridem** | 65 | 36,288 | 50,400 |

**Legend:**

No. = Number of jurisdictions which have a limit; maximum possible is 65.

National System = National truck network in US, primary system in Canada and Class ET, A & B highways in Mexico

## Observations - Compatibility Issues

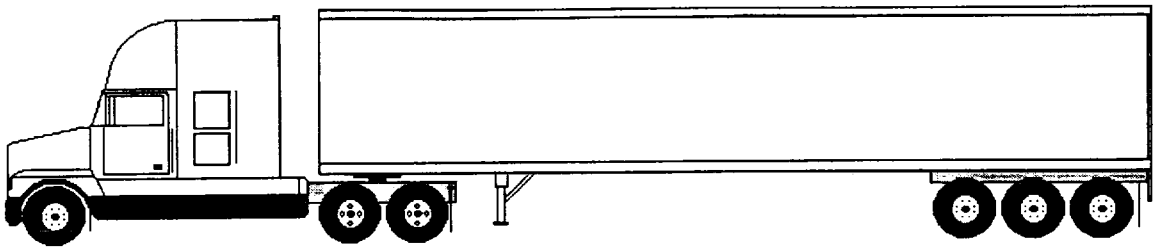

### *Dimension Limits*

| | |
|---|---|
| **Overall Length** | · *no overall length limit (USA & Mexico) versus length restriction (Canada)*<br>· *different overall length limits (Canada vs Mexico vs US State limits)* |
| **Overall Height** | · *three points in range: 4.15 m (13.5'), 4.25 m (13.9') & 4.27 m (14')* |
| **Trailer Length** | · *different trailer length limits; although 53' is widely accepted* |
| **Tractor Wheelbase** | · *only Canada controls directly* |
| **Trailer Wheelbase** | · *Canada and some US states control* |
| **Trailer Tridem Spread** | · *Not an issue for USA*<br>· *Canada limits spread to 3.7 m*<br>· *Mexico neutral on spread* |
| **Other Issues:** Additional controls: | · *kingpin setback (Canada)*<br>· *effective rear overhang (Canada)*<br>· *track width (Canada)* |

### *Weight Limits*

| | |
|---|---|
| **Steering Axle** | · *two camps; 5500 kg versus full single axle weight (9,000 to 10,000 kg)* |
| **Drive Tandem** | · *range of limits throughout NAFTA*<br>· *more weight for tractor tandem than trailer*<br>· *extra weight for specific suspension type* |
| **Trailer Tridem** | · *greater spread for higher weight vs same weight for any spread* |
| **Gross Vehicle Weight** | · *US has bridge formula cap*<br>· *Canada limits GVW based on axle weights*<br>· *Mexico limit by bridge formula; different for different routes* |

# Summary: Tractor - Semitrailer (6 axles) - National Networks

| Jurisdiction | Overall Length (m) | Overall Width (m) | Overall Height (m) | Tractor Wheelbase - max | Trailer Length - max | Trailer Wheelbase (max) | Rear Overhang - max | Tridem Spread - min | Tridem Spread - max | Steering Axle Weight - max | Drive Tandem Weight - max | Trailer Tridem 2.4 - 3m | Trailer Tridem 3.0 - 3.6m | Trailer Tridem 3.7m | GCW with Tridem 2.4 - 3m | GCW with Tridem 3.0 - 3.6m | GCW with Tridem 3.7m |
|---|---|---|---|---|---|---|---|---|---|---|---|---|---|---|---|---|---|
| **Mexico** | | 2.60 | 4.25 | | 16.16 | | | | | 6,500 | 19,500 | 22,500 | 22,500 | 22,500 | 48,500 | 48,500 | 48,500 |
| Class A&B Routes | | 2.60 | 4.25 | | 14.63 | | | | | 6,500 | 19,500 | 22,500 | 22,500 | 22,500 | 48,500 | 48,500 | 48,500 |
| **Canada** | | | | | | | | | | | | | | | | | |
| British Columbia | 23.0 | 2.60 | 4.15 | 6.20 | 16.20 | 12.50 | 35% | 2.40 | 3.70 | 5,500 | 17,000 | 24,000 | 24,000 | 24,000 | 46,500 | 46,500 | 46,500 |
| Alberta | 23.0 | 2.60 | 4.15 | 6.20 | 16.20 | 12.50 | 35% | 2.40 | 3.70 | 5,500 | 17,000 | 21,000 | 24,000 | 24,000 | 43,500 | 46,500 | 46,500 |
| Saskatchewan | 23.0 | 2.60 | 4.15 | 6.20 | 16.20 | 12.50 | 35% | 2.40 | 3.70 | 5,500 | 17,000 | 21,000 | 23,000 | 24,000 | 43,500 | 45,500 | 46,500 |
| Manitoba | 23.0 | 2.60 | 4.15 | 6.20 | 16.20 | 12.50 | 35% | 2.40 | 3.70 | 5,500 | 17,000 | 21,000 | 23,000 | 24,000 | 43,500 | 45,500 | 46,500 |
| Ontario | 23.0 | 2.60 | 4.15 | 6.20 | 16.20 | 12.50 | 35% | 2.40 | 3.70 | 5,500 | 18,000 | 21,300 | 23,000 | 25,500 | 44,800 | 46,500 | 49,000 |
| Quebec | 23.0 | 2.60 | 4.15 | 6.20 | 16.20 | 12.50 | 35% | 2.40 | 3.70 | 5,500 | 18,000 | 21,000 | 24,000 | 26,000 | 44,500 | 47,500 | 49,500 |
| New Brunswick | 23.0 | 2.60 | 4.15 | 6.20 | 16.20 | 12.50 | 35% | 2.40 | 3.70 | 5,500 | 18,000 | 21,000 | 24,000 | 26,000 | 44,500 | 47,500 | 49,500 |
| Nova Scotia | 23.0 | 2.60 | 4.15 | 6.20 | 16.20 | 12.50 | 35% | 2.40 | 3.70 | 5,500 | 18,000 | 21,000 | 24,000 | 26,000 | 44,500 | 47,500 | 49,500 |
| Prince Edward Island | 23.0 | 2.60 | 4.15 | 6.20 | 16.20 | 12.50 | 35% | 2.40 | 3.70 | 5,500 | 18,000 | 21,000 | 24,000 | 26,000 | 44,500 | 47,500 | 49,500 |
| Newfoundland | 23.0 | 2.60 | 4.15 | 6.20 | 16.20 | 12.50 | 35% | 2.40 | 3.70 | 5,500 | 18,000 | 21,000 | 24,000 | 26,000 | 44,500 | 47,500 | 49,500 |
| Yukon | 23.0 | 2.60 | 4.20 | 6.20 | 16.20 | 12.50 | 35% | 2.40 | 3.70 | 9,000 | 17,000 | 21,300 | 23,000 | 24,400 | 47,300 | 49,000 | 50,400 |
| Northwest Terr. | 23.0 | 2.60 | 4.20 | 6.20 | 16.20 | 12.50 | 35% | 2.40 | 3.70 | 5,500 | 17,000 | 21,000 | 23,000 | 24,000 | 43,500 | 45,500 | 46,500 |
| **United States** | | 2.59 | | | | | | | | 9,072 | 15,422 | 19,051 | 19,732 | 20,412 | 36,288 | 36,288 | 36,288 |
| Alabama | | 2.59 | 4.11 | | 17.37 | 12.5 | 1.52 | 2.44 | | 9,072 | 16,330 | 19,051 | 19,732 | 20,412 | 36,288 | 36,288 | 36,288 |
| Alaska | | 2.59 | 4.27 | | 14.63 | | | 3.05 | | 5,443 | 17,237 | 19,051 | 19,051 | 19,051 | 39,917 | 40,597 | 41,278 |
| Arizona | | 2.59 | 4.27 | | 17.53 | | | 2.44 | | 9,072 | 15,422 | 19,051 | 19,732 | 20,412 | 36,288 | 36,288 | 36,288 |
| Arkansas | | 2.59 | 4.11 | | 16.31 | | | 2.44 | | 5,443 | 15,422 | 19,051 | 19,732 | 20,412 | 36,288 | 36,288 | 36,288 |
| California | | 2.59 | 4.27 | | 16.15 | 12.19 | | 2.44 | | 5,670 | 15,422 | 19,051 | 19,732 | 20,412 | 36,288 | 36,288 | 36,288 |
| Colorado | | 2.59 | 3.96 | | 17.47 | | | 2.44 | | 9,072 | 16,330 | 19,051 | 19,732 | 20,412 | 36,288 | 36,288 | 36,288 |
| Connecticut | | 2.59 | 4.11 | | 16.15 | | 1.22 | 2.44 | | 5,443 | 16,330 | 19,051 | 19,732 | 20,412 | 36,288 | 36,288 | 36,288 |
| Delaware | | 2.59 | 4.11 | | 16.15 | | 1.83 | 2.44 | | 9,072 | 15,422 | 19,051 | 19,732 | 20,412 | 36,288 | 36,288 | 36,288 |
| Dist. of Columbia | | 2.59 | 4.11 | | 14.63 | | | 2.44 | | 9,072 | 15,422 | 17,237 | 19,278 | 19,958 | 36,288 | 36,288 | 36,288 |
| Florida | | 2.59 | 4.11 | | 16.15 | 12.5 | 1.22 | 2.44 | | 5,489 | 19,958 | 19,958 | 19,958 | 20,412 | 36,288 | 36,288 | 36,288 |
| Georgia | | 2.59 | 4.11 | | 16.15 | 12.5 | | 2.44 | | 8,165 | 15,422 | 19,051 | 19,732 | 20,412 | 36,288 | 36,288 | 36,288 |
| Hawaii | | 2.74 | 4.27 | | | | | 2.44 | | 10,206 | 15,422 | 19,596 | 20,412 | 20,866 | 39,917 | 39,917 | 39,917 |
| Idaho | | 2.59 | 4.27 | | 16.15 | | | 2.44 | | 5,443 | 15,422 | 19,051 | 19,732 | 20,412 | 36,288 | 40,597 | 41,278 |
| Illinois | | 2.59 | 4.11 | | 16.15 | 12.95 | | 2.44 | | 9,072 | 15,422 | 19,051 | 19,732 | 20,412 | 36,288 | 36,288 | 36,288 |
| Indiana | | 2.59 | 4.11 | | 16.15 | 12.34 | | 2.44 | | 7,258 | 15,422 | 19,051 | 19,732 | 20,412 | 36,288 | 36,288 | 36,288 |
| Iowa | | 2.59 | 4.11 | | 16.15 | | | 2.44 | | 9,072 | 15,422 | 19,051 | 19,732 | 20,412 | 36,288 | 36,288 | 36,288 |
| Kansas | | 2.59 | 4.27 | | 18.14 | | | 2.44 | | 9,072 | 15,422 | 19,051 | 19,732 | 20,412 | 38,783 | 38,783 | 38,783 |
| Kentucky | | 2.59 | 4.11 | | 16.15 | | | 2.44 | | 5,443 | 15,422 | 21,773 | 21,773 | 21,773 | 36,288 | 36,288 | 36,288 |
| Louisiana | | 2.59 | 4.11 | | 18.14 | | | 2.44 | | 5,897 | 15,422 | 20,412 | 20,412 | 20,412 | 39,917 | 39,917 | 39,917 |
| Maine | | 2.59 | 4.11 | | **16.15** | 13.11 | | 2.44 | | 5,443 | 17,237 | 21,773 | 21,773 | 21,773 | 45,360 | 45,360 | 45,360 |
| Maryland | | 2.59 | 4.11 | | 16.15 | 12.5 | | 2.44 | | 5,443 | 15,422 | 19,051 | 19,732 | 20,412 | 36,288 | 36,288 | 36,288 |
| Massachusetts | | 2.59 | 4.11 | | 16.15 | | | 2.44 | | 7,258 | 16,330 | 19,051 | 19,732 | 20,412 | 36,288 | 36,288 | 36,288 |
| Michigan | | 2.59 | 4.11 | | 16.15 | 12.5 | | 2.13 | 5.49 | 6,350 | 15,422 | 17,690 | 17,690 | 17,690 | 38,556 | 38,556 | 38,556 |
| Minnesota | | 2.59 | 4.11 | | 16.15 | 12.5 | | 2.44 | | 5,443 | 15,422 | 19,051 | 19,732 | 20,412 | 36,288 | 36,288 | 36,288 |
| Mississippi | | 2.59 | 4.11 | | 16.15 | | | 2.44 | | 4,990 | 15,422 | 19,051 | 19,732 | 20,412 | 36,288 | 36,288 | 36,288 |
| Missouri | | 2.59 | 4.27 | | 16.15 | | | 2.44 | | 9,072 | 15,422 | 15,060 | 16,148 | 17,237 | 36,288 | 36,288 | 36,288 |
| Montana | | 2.59 | 4.27 | | 16.15 | | | 2.44 | | 5,443 | 15,422 | 19,051 | 19,732 | 20,412 | 36,288 | 36,288 | 36,288 |
| Nebraska | | 2.59 | 4.42 | | 16.15 | | | 2.44 | | 9,072 | 15,422 | 19,051 | 19,732 | 20,412 | 43,092 | 43,092 | 43,092 |
| Nevada | | 2.59 | 4.27 | | 16.15 | | | 2.44 | | 5,443 | 15,422 | 19,051 | 19,732 | 20,412 | 39,917 | 40,597 | 41,278 |
| New Hampshire | | 2.59 | 4.11 | | 16.15 | 12.5 | | 2.44 | | 9,072 | 15,422 | 19,051 | 19,732 | 20,412 | 36,288 | 36,288 | 36,288 |
| New Jersey | | 2.59 | 4.11 | | 16.15 | 12.5 | | 2.44 | | 7,258 | 15,422 | 19,051 | 19,732 | 20,412 | 36,288 | 36,288 | 36,288 |
| New Mexico | 19.8 | 2.59 | 4.27 | | 17.53 | | | 3.05 | | 5,443 | 15,568 | 15,568 | 17,690 | 18,398 | 39,191 | 39,191 | 39,191 |
| New York | | 2.59 | 4.11 | | 17.53 | 12.5 | | 2.44 | | 10,161 | 16,330 | 19,051 | 19,732 | 20,412 | 36,288 | 36,288 | 36,288 |
| North Carolina | | 2.59 | 4.11 | | 16.15 | 12.5 | | 2.44 | | 9,072 | 17,237 | 19,051 | 19,732 | 20,412 | 36,288 | 36,288 | 36,288 |
| North Dakota | | 2.59 | 4.27 | | 16.15 | | | 2.44 | | 4,990 | 15,422 | 19,051 | 19,732 | 20,412 | 39,463 | 40,144 | 40,824 |
| Ohio | | 2.59 | 4.11 | | 16.15 | | | 2.44 | | 5,897 | 15,422 | 19,051 | 19,732 | 20,412 | 36,288 | 36,288 | 36,288 |
| Oklahoma | | 2.59 | 4.11 | | 18.14 | | | 2.44 | | 5,897 | 15,422 | 19,051 | 19,732 | 20,412 | 40,370 | 40,824 | 40,824 |
| Oregon | | 2.59 | 4.27 | | 16.15 | | | 2.44 | | 5,443 | 15,422 | 19,051 | 19,732 | 20,412 | 36,288 | 36,288 | 36,288 |
| Pennsylvania | | 2.59 | 4.11 | | 16.15 | | | 2.44 | 4.88 | 7,258 | 16,330 | 19,051 | 19,732 | 20,412 | 36,288 | 36,288 | 36,288 |
| Rhode Island | | 2.59 | 4.11 | | 16.15 | | 1.83 | 2.44 | | 10,161 | 16,330 | 16,330 | 20,321 | 20,412 | 36,288 | 36,288 | 36,288 |
| South Carolina | | 2.59 | 4.11 | | 16.15 | 12.5 | | 2.44 | | 9,072 | 17,963 | 19,051 | 19,732 | 20,412 | 40,643 | 40,643 | 40,643 |
| South Dakota | | 2.59 | 4.27 | | 16.15 | | | 2.44 | | 5,443 | 15,422 | 19,051 | 19,732 | 20,412 | 39,917 | 40,597 | 41,278 |
| Tennessee | | 2.59 | 4.11 | | **16.15** | 12.5 | | 2.44 | | 9,072 | 15,422 | 19,051 | 19,732 | 20,412 | 36,288 | 36,288 | 36,288 |
| Texas | | 2.59 | 4.27 | | 17.98 | | | 2.44 | | 5,897 | 15,422 | 19,051 | 19,732 | 20,412 | 36,288 | 36,288 | 36,288 |
| Utah | | 2.59 | 4.27 | | 16.15 | 12.34 | | 2.44 | | 5,443 | 15,422 | 19,051 | 19,732 | 20,412 | 36,288 | 36,288 | 36,288 |
| Vermont | | 2.59 | 4.11 | | 16.15 | 12.5 | | 2.44 | | 5,443 | 16,330 | 19,051 | 19,732 | 20,412 | 36,288 | 36,288 | 36,288 |
| Virginia | | 2.59 | 4.11 | | 16.15 | 11.28 | | 2.44 | | 5,897 | 15,422 | 19,051 | 19,732 | 20,412 | 36,288 | 36,288 | 36,288 |
| Washington | | 2.59 | 4.27 | | 16.15 | | | 2.44 | | 5,443 | 15,422 | 19,051 | 19,732 | 20,412 | 39,917 | 40,597 | 41,278 |
| West Virginia | | 2.59 | 4.11 | | 16.15 | 11.28 | | 2.44 | | 9,072 | 15,422 | 19,051 | 19,732 | 20,412 | 36,288 | 36,288 | 36,288 |
| Wisconsin | | 2.59 | 4.11 | | 16.15 | 12.5 | | 2.44 | | 5,897 | 15,422 | 19,051 | 19,732 | 20,412 | 36,288 | 36,288 | 36,288 |
| Wyoming | | 2.59 | 4.27 | | 18.29 | | | 1.01 | | 6,804 | 16,330 | 19,278 | 19,732 | 16,330 | 42,638 | 42,638 | 42,638 |

## 32. A Train Double Trailer Configuration - Five Axles

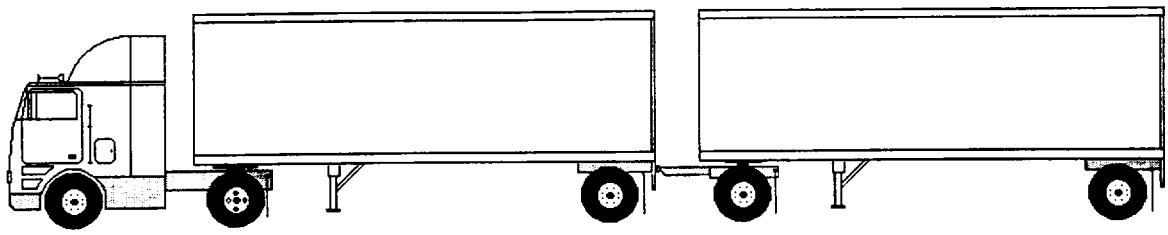

### Current Weight and Dimension Limit Summary:

**Dimension Limits**

| | *National Network* | | |
|---|---|---|---|
| *Summary* | ***No*** | ***Lowest Limit*** | ***Highest Limit*** |
| **Overall Length** | 13 | 25 | 31.0 |
| **Overall Width** | 65 | 2.59 | 2.74 |
| **Overall Height** | 64 | 3.96 | 4.42 |
| **First Trailer Length** | 45 | 8.53 | 16.15 |
| **Second Trailer Length** | 45 | 8.53 | 16.15 |
| **Box Length** | 21 | 18.5 | 33.53 |

**Weight Limits**

| | *National Network* | | |
|---|---|---|---|
| *Summary* | ***No*** | ***Lowest Limit*** | ***Highest Limit*** |
| **Steering Axle** | 65 | 4,990 | 10,206 |
| **Tractor Drive Axle** | 65 | 9,072 | 11,000 |
| **Trailer Axle** | 65 | 9,072 | 10,000 |
| **GCW** | 65 | 36,288 | 47,500 |

**Legend:**

No. = Number of jurisdictions which have a limit; maximum possible is 65.

National System = National truck network in US, primary system in Canada and Class ET, A & B highways in Mexico

## Observations - Compatibility Issues

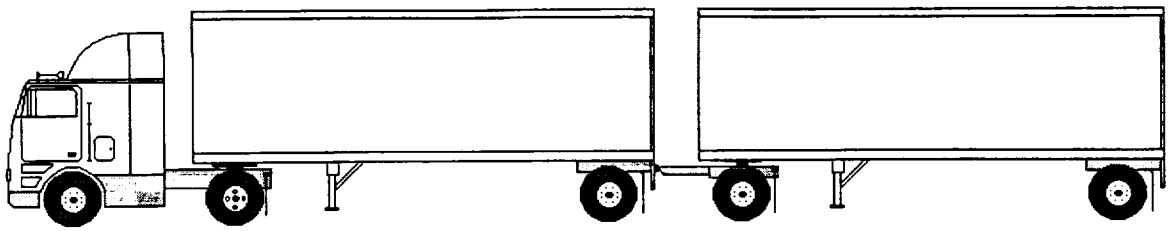

### *Dimension Limits*

| | |
|---|---|
| **Overall Length** | · *no overall length limit (USA) versus length restriction (Canada & Mexico)*<br>· *different overall length limits (Canada vs Mexico vs US State limits)* |
| **Overall Height** | · *three points in range: 4.15 m (13.5'), 4.25 m (13.9') & 4.27 m (14')* |
| **Trailer Length(s)**<br>**Box Length**<br>**Tractor Wheelbase**<br>**Trailer Wheelbase** | · *independent controls but closely linked*<br>· *primary source of interjurisdictional conflicts/operational complications* |
| **Interaxle Spacing** | · *bridge formula (USA & Mexico) versus fixed limits (Canada)* |
| **Other Issues:** Additional controls: | · *kingpin setback (Canada)*<br>· *hitch offset (Canada)*<br>· *track width (Canada)* |

### *Weight Limits*

| | |
|---|---|
| **Steering Axle** | · *two camps; 5500 kg versus full single axle weight (9,000 to 10,000 kg)* |
| **Drive Axle** | · *range of limits throughout NAFTA*<br>· *more weight for tractor tandem than trailer*<br>· *extra weight for specific suspension type* |
| **Trailer Axles** | · *range (narrow) of limits throughout NAFTA*<br>· *cap on second trailer weight* |
| **Gross Vehicle Weight** | · *US has cap based on bridge formula*<br>· *Canada has cap based on stability*<br>· *Mexico limit by bridge formula* |

# Summary: A Train Double (5 axles) - National Networks

| Jurisdiction | Overall Length | Overall Width | Overall Height | Tractor Wb - max | First Trailer Length - max | Second Trailer Length - max | Box Length - max | Steering Axle - max | Drive Axle - max | Trailer Axle - max | GCW |
|---|---|---|---|---|---|---|---|---|---|---|---|
| **Mexico** | 31 | 2.6 | 4.25 | | | | | 6,500 | 11,000 | 10,000 | 47,500 |
| Class B Routes | 28.5 | 2.6 | 4.25 | | | | | 6,500 | 11,000 | 10,000 | 47,500 |
| **Canada** | | | | | | | | | | | |
| British Columbia | 25 | 2.6 | 4.15 | 6.2 | | | 20 | 5,500 | 9,100 | 9,100 | 39,700 |
| Alberta | 25 | 2.6 | 4.15 | 6.2 | | | 20 | 5,500 | 9,100 | 9,100 | 39,700 |
| Saskatchewan | 25 | 2.6 | 4.15 | 6.2 | | | 20 | 5,500 | 9,100 | 9,100 | 39,700 |
| Manitoba | 25 | 2.6 | 4.15 | 6.2 | | | 20 | 5,500 | 9,100 | 9,100 | 39,700 |
| Ontario | 25 | 2.6 | 4.15 | 6.2 | | | 18.5 | 5,500 | 10,000 | 10,000 | 45,500 |
| Quebec | 25 | 2.6 | 4.15 | 6.2 | | | 18.5 | 5,500 | 10,000 | 10,000 | 45,500 |
| New Brunswick | 25 | 2.6 | 4.15 | 6.2 | | | 20 | 5,500 | 9,100 | 9,100 | 41,900 |
| Nova Scotia | 25 | 2.6 | 4.15 | 6.2 | | | 20 | 5,500 | 9,100 | 9,100 | 41,900 |
| Prince Edward Island | 25 | 2.6 | 4.15 | 6.2 | | | 20 | 5,500 | 9,100 | 9,100 | 41,900 |
| Newfoundland | 25 | 2.6 | 4.15 | 6.2 | | | 20 | 5,500 | 9,100 | 9,100 | 41,900 |
| Yukon | 25 | 2.6 | 4.2 | 6.2 | | | 20 | 5,500 | 9,100 | 9,100 | 39,700 |
| Northwest Terr. | 25 | 2.6 | 4.2 | 6.2 | | | 20 | 5,500 | 9,100 | 9,100 | 39,700 |
| **United States** | | 2.59 | | | | | | 9,072 | 9,072 | 9,072 | 36,288 |
| Alabama | | 2.59 | 4.11 | | 8.69 | 8.69 | | 9,072 | 9,072 | 9,072 | 36,288 |
| Alaska | | 2.59 | 4.27 | | | | 28.96 | 5,443 | 9,072 | 9,072 | 39,463 |
| Arizona | | 2.59 | 4.27 | | 8.69 | 8.69 | | 9,072 | 9,072 | 9,072 | 36,288 |
| Arkansas | | 2.59 | 4.11 | | 8.53 | 8.53 | | 5,443 | 9,072 | 9,072 | 36,288 |
| California | | 2.59 | 4.27 | | 8.69 | 8.69 | | 5,670 | 9,072 | 9,072 | 36,288 |
| Colorado | | 2.59 | 3.96 | | 8.69 | 8.69 | | 9,072 | 9,072 | 9,072 | 36,288 |
| Connecticut | | 2.59 | 4.11 | | 8.53 | 8.53 | | 5,443 | 10,161 | 10,161 | 36,288 |
| Delaware | | 2.59 | 4.11 | | 8.84 | 8.84 | | 9,072 | 9,072 | 9,072 | 36,288 |
| Dist. of Columbia | | 2.59 | 4.11 | | 8.53 | 8.53 | | 9,979 | 9,979 | 9,979 | 36,288 |
| Florida | | 2.59 | 4.11 | | 8.53 | 8.53 | | 5,489 | 9,979 | 9,979 | 36,288 |
| Georgia | | 2.59 | 4.11 | | 8.53 | 8.53 | | 8,165 | 9,072 | 9,226 | 36,288 |
| Hawaii | | 2.74 | 4.27 | | | | | 10,206 | 10,206 | 10,206 | 36,288 |
| Idaho | | 2.59 | 4.27 | | | | 20.73 | 5,443 | 9,072 | 9,072 | 36,288 |
| Illinois | | 2.59 | 4.11 | | 8.69 | 8.69 | | 9,072 | 9,072 | 9,072 | 36,288 |
| Indiana | | 2.59 | 4.11 | | 8.69 | 8.69 | | 7,258 | 9,072 | 9,072 | 36,288 |
| Iowa | | 2.59 | 4.11 | | 8.69 | 8.69 | | 9,072 | 9,072 | 9,072 | 36,288 |
| Kansas | | 2.59 | 4.27 | | 8.69 | 8.69 | | 9,072 | 9,072 | 9,072 | 36,288 |
| Kentucky | | 2.59 | 4.11 | | 8.53 | 8.53 | | 5,443 | 9,072 | 9,072 | 36,288 |
| Louisiana | | 2.59 | 4.11 | | 9.14 | 9.14 | | 5,897 | 9,072 | 9,072 | 36,288 |
| Maine | | 2.59 | 4.11 | | 8.69 | 8.69 | | 5,443 | 9,979 | 9,072 | 36,288 |
| Maryland | | 2.59 | 4.11 | | 8.53 | 8.53 | | 5,443 | 10,161 | 10,161 | 36,288 |
| Massachusetts | | 2.59 | 4.11 | | 8.69 | 8.69 | | 7,258 | 10,161 | 10,161 | 36,288 |
| Michigan | | 2.59 | 4.11 | | 8.69 | 8.69 | | 6,350 | 9,072 | 9,072 | 36,288 |
| Minnesota | | 2.59 | 4.11 | | 8.69 | 8.69 | | 5,443 | 9,072 | 9,072 | 36,288 |
| Mississippi | | 2.59 | 4.11 | | 9.14 | 9.14 | | 4,990 | 9,072 | 9,072 | 36,288 |
| Missouri | | 2.59 | 4.27 | | 8.53 | 8.53 | | 9,072 | 9,072 | 9,072 | 36,288 |
| Montana | | 2.59 | 4.27 | | 8.69 | 8.69 | | 5,443 | 9,072 | 9,072 | 36,288 |
| Nebraska | | 2.59 | 4.42 | | | | 19.81 | 9,072 | 9,072 | 9,072 | 36,288 |
| Nevada | | 2.59 | 4.27 | | 8.69 | 8.69 | | 5,443 | 9,072 | 9,072 | 36,288 |
| New Hampshire | | 2.59 | 4.11 | | 8.53 | 8.53 | | 9,072 | 9,072 | 9,072 | 36,288 |
| New Jersey | | 2.59 | 4.11 | | 8.53 | 8.53 | | 7,258 | 10,161 | 10,161 | 36,288 |
| New Mexico | | 2.59 | 4.27 | | 8.69 | 8.69 | | 5,443 | 9,798 | 9,798 | 39,191 |
| New York | | 2.59 | 4.11 | | 8.69 | 8.69 | | 7,258 | 10,161 | 10,161 | 36,288 |
| North Carolina | | 2.59 | 4.11 | | 8.53 | 8.53 | | 9,072 | 9,072 | 9,072 | 36,288 |
| North Dakota | | 2.59 | 4.27 | | 16.15 | 16.15 | 31.39 | 4,990 | 9,072 | 9,072 | 41,278 |
| Ohio | | 2.59 | 4.11 | | 8.69 | 8.69 | | 5,897 | 9,072 | 9,072 | 36,288 |
| Oklahoma | | 2.59 | 4.11 | | 16.15 | 16.15 | 33.53 | 5,897 | 9,072 | 9,072 | 36,288 |
| Oregon | | 2.59 | 4.27 | | 12.19 | 12.19 | 20.73 | 5,443 | 9,072 | 9,072 | 40,824 |
| Pennsylvania | | 2.59 | 4.11 | | 8.69 | 8.69 | | 7,258 | 10,161 | 10,161 | 36,288 |
| Rhode Island | | 2.59 | 4.11 | | 8.69 | 8.69 | | 10,161 | 10,161 | 10,161 | 36,288 |
| South Carolina | | 2.59 | 4.11 | | 8.69 | 8.69 | | 9,072 | 9,072 | 9,072 | 36,288 |
| South Dakota | | 2.59 | 4.27 | | 8.69 | 8.69 | | 5,443 | 9,072 | 9,072 | 36,288 |
| Tennessee | | 2.59 | 4.11 | | 8.69 | 8.69 | | 9,072 | 9,072 | 9,072 | 36,288 |
| Texas | | 2.59 | 4.27 | | 8.69 | 8.69 | | 5,897 | 9,072 | 9,072 | 36,288 |
| Utah | | 2.59 | 4.27 | | | | 18.59 | 5,443 | 9,072 | 9,072 | 36,288 |
| Vermont | | 2.59 | 4.11 | | 8.53 | 8.53 | | 5,443 | 9,072 | 9,072 | 36,288 |
| Virginia | | 2.59 | 4.11 | | 8.69 | 8.69 | | 5,897 | 9,072 | 9,072 | 36,288 |
| Washington | | 2.59 | 4.27 | | | | 18.59 | 5,443 | 9,072 | 9,072 | 39,463 |
| West Virginia | | 2.59 | 4.11 | | 8.69 | 8.69 | | 9,072 | 9,072 | 9,072 | 36,288 |
| Wisconsin | | 2.59 | 4.11 | | 8.69 | 8.69 | | 5,897 | 9,072 | 9,072 | 36,288 |
| Wyoming | | 2.59 | 4.27 | | 14.63 | 12.19 | 24.69 | 6,804 | 9,072 | 9,072 | 43,092 |

## 15. A Train Double Trailer Configuration - Six Axles

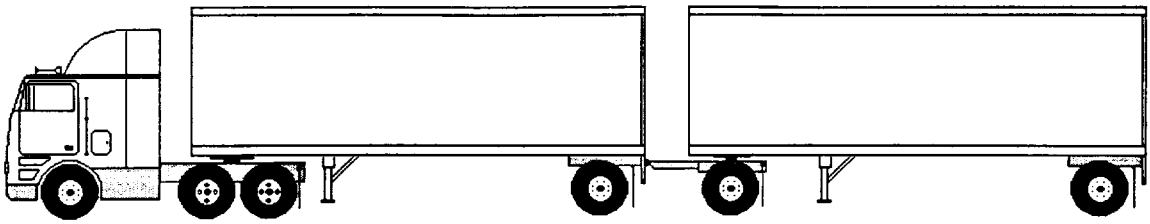

### Current Weight and Dimension Limit Summary:

**Dimension Limits**

| Summary | National Network | | |
|---|---|---|---|
| | ***No*** | ***Lowest Limit*** | ***Highest Limit*** |
| **Overall Length** | 13 | 25 | 31.0 |
| **Overall Width** | 65 | 2.59 | 2.74 |
| **Overall Height** | 64 | 3.96 | 4.42 |
| **First Trailer Length** | 45 | 8.53 | 16.15 |
| **Second Trailer Length** | 45 | 8.53 | 16.15 |
| **Box Length** | 19 | 17.7 | 24.7 |

**Weight Limits**

| Summary | National Network | | |
|---|---|---|---|
| | ***No*** | ***Lowest Limit*** | ***Highest Limit*** |
| **Steering Axle** | 65 | 4,990 | 10,206 |
| **Tractor Drive Axle** | 65 | 14,515 | 19,958 |
| **Trailer Axle** | 65 | 8,165 | 10,206 |
| **GCW** | 65 | 36,288 | 56,000 |

**Legend:**

No. = Number of jurisdictions which have a limit; maximum possible is 65.

National System = National truck network in US, primary system in Canada and Class ET, A & B highways in Mexico

## Observations - Compatibility Issues

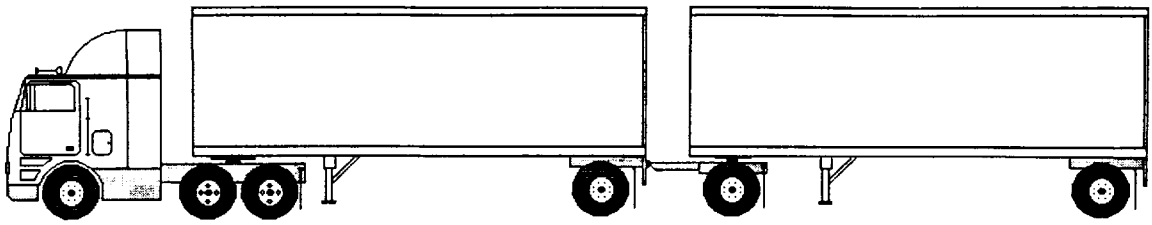

### *Dimension Limits*

| | |
|---|---|
| **Overall Length** | · *no overall length limit (USA) versus length restriction (Canada & Mexico)*<br>· *different overall length limits (Canada vs Mexico vs US State limits)* |
| **Overall Height** | · *Three points in range: 4.15 m (13.5'), 4.25 m (13.9') & 4.27 m (14')* |
| **Trailer Length(s)**<br>**Box Length**<br>**Tractor Wheelbase**<br>**Trailer Wheelbase** | · *independent controls but closely linked*<br>· *primary source of interjurisdictional conflicts/operational complications* |
| **Interaxle Spacing** | · *bridge formula (USA & Mexico) versus fixed limits (Canada)* |
| **Other Issues:** Additional controls: | · *kingpin setback (Canada)*<br>· *hitch offset (Canada)*<br>· *track width (Canada)* |

### *Weight Limits*

| | |
|---|---|
| **Steering Axle** | · *two camps; 5500 kg versus full single axle weight (9,000 to 10,000 kg)* |
| **Drive Tandem** | · *range of limits throughout NAFTA*<br>· *extra weight for specific suspension type* |
| **Trailer Axles** | · *range (narrow) of limits throughout NAFTA*<br>· *cap on second trailer weight (Canada)* |
| **Gross Vehicle Weight** | · *US has cap based on bridge formula*<br>· *Canada has cap based on stability*<br>· *Mexico limit by bridge formula* |

# Summary: A Train Double (6 axles) - National Networks

| Jurisdiction | Overall Length | Overall Width | Overall Height | Tractor Wb - max | First Trailer Length - max | Second Trailer Length - max | Box Length - max | Steering Axle - max | Tractor Tandem - max | Trailer Axle Weight - max | GCW |
|---|---|---|---|---|---|---|---|---|---|---|---|
| **Mexico** | 31 | 2.6 | 4.25 | | | | | 6,500 | 19,500 | 10,000 | 56,000 |
| Class B Routes | 28.5 | 2.6 | 4.25 | | | | | 6,500 | 19,500 | 10,000 | 56,000 |
| **Canada** | | | | | | | | | | | |
| British Columbia | 25 | 2.6 | 4.15 | 6.2 | | | 20 | 5,500 | 17,000 | 9,100 | 47,600 |
| Alberta | 25 | 2.6 | 4.15 | 6.2 | | | 20 | 5,500 | 17,000 | 9,100 | 47,600 |
| Saskatchewan | 25 | 2.6 | 4.15 | 6.2 | | | 20 | 5,500 | 17,000 | 9,100 | 47,600 |
| Manitoba | 25 | 2.6 | 4.15 | 6.2 | | | 20 | 5,500 | 17,000 | 9,100 | 47,600 |
| Ontario | 25 | 2.6 | 4.15 | 6.2 | | | 18.5 | 5,500 | 18,000 | 10,000 | 53,500 |
| Quebec | 25 | 2.6 | 4.15 | 6.2 | | | 18.5 | 5,500 | 18,000 | 10,000 | 53,500 |
| New Brunswick | 25 | 2.6 | 4.15 | 6.2 | | | 20 | 5,500 | 18,000 | 9,100 | 50,800 |
| Nova Scotia | 25 | 2.6 | 4.15 | 6.2 | | | 20 | 5,500 | 18,000 | 9,100 | 50,800 |
| Prince Edward Island | 25 | 2.6 | 4.15 | 6.2 | | | 20 | 5,500 | 18,000 | 9,100 | 50,800 |
| Newfoundland | 25 | 2.6 | 4.15 | 6.2 | | | 20 | 5,500 | 18,000 | 9,100 | 50,800 |
| Yukon | 25 | 2.6 | 4.2 | 6.2 | | | 20 | 5,500 | 17,000 | 9,100 | 47,600 |
| Northwest Terr. | 25 | 2.6 | 4.2 | 6.2 | | | 20 | 5,500 | 17,000 | 9,100 | 47,600 |
| **United States** | | 2.59 | | | | | | 9,072 | 15,422 | 9,072 | 36,288 |
| Alabama | | 2.59 | 4.11 | | 8.69 | 8.69 | | 9,072 | 16,330 | 9,072 | 38,102 |
| Alaska | | 2.59 | 4.27 | | | | 28.96 | 5,443 | 17,237 | 9,072 | 41,278 |
| Arizona | | 2.59 | 4.27 | | 8.69 | 8.69 | | 9,072 | 15,422 | 9,072 | 36,288 |
| Arkansas | | 2.59 | 4.11 | | 8.53 | 8.53 | | 5,443 | 15,422 | 9,072 | 36,288 |
| California | | 2.59 | 4.27 | | 8.69 | 8.69 | | 5,670 | 15,422 | 9,072 | 36,288 |
| Colorado | | 2.59 | 3.96 | | 8.69 | 8.69 | | 9,072 | 18,144 | 9,072 | 38,556 |
| Connecticut | | 2.59 | 4.11 | | 8.53 | 8.53 | | 5,443 | 16,330 | 10,161 | 36,288 |
| Delaware | | 2.59 | 4.11 | | 8.84 | 8.84 | | 9,072 | 18,144 | 9,072 | 36,288 |
| Dist. of Columbia | | 2.59 | 4.11 | | 8.53 | 8.53 | | 9,979 | 15,422 | 9,979 | 36,288 |
| Florida | | 2.59 | 4.11 | | 8.53 | 8.53 | | 5,489 | 19,958 | 9,979 | 36,288 |
| Georgia | | 2.59 | 4.11 | | 8.53 | 8.53 | | 8,165 | 15,422 | 9,226 | 36,288 |
| Hawaii | | 2.74 | 4.27 | | | | | 10,206 | 15,422 | 10,206 | 39,917 |
| Idaho | | 2.59 | 4.27 | | | | 20.73 | 5,443 | 15,422 | 9,072 | 41,278 |
| Illinois | | 2.59 | 4.11 | | 8.69 | 8.69 | | 9,072 | 15,422 | 9,072 | 36,288 |
| Indiana | | 2.59 | 4.11 | | 8.69 | 8.69 | | 7,258 | 15,422 | 9,072 | 36,288 |
| Iowa | | 2.59 | 4.11 | | 8.69 | 8.69 | | 9,072 | 15,422 | 9,072 | 36,288 |
| Kansas | | 2.59 | 4.27 | | 8.69 | 8.69 | | 9,072 | 15,422 | 9,072 | 38,783 |
| Kentucky | | 2.59 | 4.11 | | 8.53 | 8.53 | | 5,443 | 15,422 | 9,072 | 36,288 |
| Louisiana | | 2.59 | 4.11 | | 9.14 | 9.14 | | 5,897 | 15,422 | 9,979 | 36,288 |
| Maine | | 2.59 | 4.11 | | 8.69 | 8.69 | | 5,443 | 17,237 | 9,072 | 36,288 |
| Maryland | | 2.59 | 4.11 | | 8.53 | 8.53 | | 5,443 | 15,422 | 9,072 | 36,288 |
| Massachusetts | | 2.59 | 4.11 | | 8.69 | 8.69 | | 7,258 | 16,330 | 10,161 | 36,288 |
| Michigan | | 2.59 | 4.11 | | 8.69 | 8.69 | | 6,350 | 14,515 | 8,165 | 40,824 |
| Minnesota | | 2.59 | 4.11 | | 8.69 | 8.69 | | 5,443 | 15,422 | 9,072 | 36,288 |
| Mississippi | | 2.59 | 4.11 | | 9.14 | 9.14 | | 4,990 | 15,422 | 9,072 | 36,288 |
| Missouri | | 2.59 | 4.27 | | 8.53 | 8.53 | | 9,072 | 15,422 | 9,072 | 36,288 |
| Montana | | 2.59 | 4.27 | | 8.69 | 8.69 | | 5,443 | 15,422 | 9,072 | 36,288 |
| Nebraska | | 2.59 | 4.42 | | | | 19.81 | 9,072 | 15,422 | 9,072 | 41,278 |
| Nevada | | 2.59 | 4.27 | | 8.69 | 8.69 | | 5,443 | 15,422 | 9,072 | 41,278 |
| New Hampshire | | 2.59 | 4.11 | | 8.53 | 8.53 | | 9,072 | 15,422 | 9,072 | 36,288 |
| New Jersey | | 2.59 | 4.11 | | 8.53 | 8.53 | | 7,258 | 15,422 | 10,161 | 36,288 |
| New Mexico | | 2.59 | 4.27 | | 8.69 | 8.69 | | 5,443 | 15,568 | 9,798 | 39,191 |
| New York | | 2.59 | 4.11 | | 8.69 | 8.69 | | 7,258 | 16,330 | 10,161 | 36,288 |
| North Carolina | | 2.59 | 4.11 | | 8.53 | 8.53 | | 9,072 | 15,422 | 9,072 | 36,288 |
| North Dakota | | 2.59 | 4.27 | | 16.15 | 16.15 | 31.39 | 4,990 | 15,422 | 9,072 | 47,628 |
| Ohio | | 2.59 | 4.11 | | 8.69 | 8.69 | | 5,897 | 15,422 | 9,072 | 36,288 |
| Oklahoma | | 2.59 | 4.11 | | 16.15 | 16.15 | 33.53 | 5,897 | 15,422 | 9,072 | 40,824 |
| Oregon | | 2.59 | 4.27 | | 12.19 | 12.19 | 20.73 | 5,443 | 15,422 | 9,072 | 43,772 |
| Pennsylvania | | 2.59 | 4.11 | | 8.69 | 8.69 | | 7,258 | 16,330 | 10,161 | 36,288 |
| Rhode Island | | 2.59 | 4.11 | | 8.69 | 8.69 | | 10,161 | 16,330 | 10,161 | 36,288 |
| South Carolina | | 2.59 | 4.11 | | 8.69 | 8.69 | | 9,072 | 17,963 | 9,072 | 36,560 |
| South Dakota | | 2.59 | 4.27 | | 8.69 | 8.69 | | 5,443 | 15,422 | 9,072 | 41,278 |
| Tennessee | | 2.59 | 4.11 | | 8.69 | 8.69 | | 9,072 | 15,422 | 9,072 | 36,288 |
| Texas | | 2.59 | 4.27 | | 8.69 | 8.69 | | 5,897 | 15,422 | 9,072 | 36,288 |
| Utah | | 2.59 | 4.27 | | | | 18.59 | 5,443 | 15,422 | 9,072 | 36,288 |
| Vermont | | 2.59 | 4.11 | | 8.53 | 8.53 | | 5,443 | 16,330 | 9,072 | 36,288 |
| Virginia | | 2.59 | 4.11 | | 8.69 | 8.69 | | 5,897 | 15,422 | 9,072 | 36,288 |
| Washington | | 2.59 | 4.27 | | | | 18.59 | 5,443 | 15,422 | 9,072 | 41,278 |
| West Virginia | | 2.59 | 4.11 | | 8.69 | 8.69 | | 9,072 | 15,422 | 9,072 | 36,288 |
| Wisconsin | | 2.59 | 4.11 | | 8.69 | 8.69 | | 5,897 | 15,422 | 9,072 | 36,288 |
| Wyoming | | 2.59 | 4.27 | | 14.63 | 12.19 | 24.69 | 6,804 | 16,330 | 9,072 | 48,082 |

# MANUFACTURING REQUIREMENTS APPLICABLE TO MOTOR CARRIERS

## General Information

All commercial vehicles used in the United States, including those engaging in cross-border or international transportation and/or the transportation of goods or persons, must have been manufactured in compliance with the Federal Motor Vehicle Safety Standards (FMVSS) in effect at the time the vehicle was manufactured. The FMVSS are promulgated by the National Highway Traffic Safety Administration (NHTSA) and are set out at 49 CFR Part 571. Information on the FMVSS applicable to heavy trucks and buses is attached as Appendix A. The FMVSS are available on the website of the National Archives and Records Administration at **http://www.access.gpo.gov/nara/cfr/waisidx_00/49cfr571_00.html.**

Motor carriers must ensure that the vehicles that they use in the United States have been certified as complying with all applicable FMVSS by their original manufacturer or by a Registered Importer, and that the required certification label or tag is permanently affixed to the vehicle. Samples of certification labels used by original manufacturers and registered importers are attached as Appendix B.

1. Information on contracting with a Registered Importer to bring a vehicle not certified to the FMVSS into conformity can be found on NHTSA's website at **http://www.nhtsa.dot.gov/cars/rules/import/.**

2. For additional information, please contact:

Equipment and Imports Division
Office of Vehicle Safety Compliance
National Highway Traffic Safety Administration
U.S. Department of Transportation
Washington, D.C. 20590
Tel: (202) 366-5291

Vehicle Division
Office of Vehicle Safety Compliance
National Highway Traffic Safety Admin.
U.S. Department of Transportation
Washington, D.C. 20590
Tel: (202) 366-2820

Internet: **http://www.nhtsa.dot.gov/cars/rules/import/**

## Detailed Information

**PURPOSE**: To identify relevant Federal statutory provisions and National Highway Traffic Safety Administration (NHTSA) standards and regulations affecting motor carriers. This information sheet merely highlights the major requirements affecting motor carriers. Each motor carrier and its attorney should consult the specific statutory provisions, regulations, and standards to determine its responsibilities. All NHTSA regulations referred to below can be found in the print volume of Title 49 of the Code of Federal Regulations containing Parts 400-999 or electronically at **http://www.access.gpo.gov/nara/cfr/waisidx_00/49cfr571_00.html.**

**PROHIBITION AGAINST IMPORTING NONCOMPLYING VEHICLES**: A person may not import into the United States any motor vehicle or motor vehicle equipment manufactured on or after the date an applicable motor vehicle safety standard prescribed under 49 USCS §§ 30101 et seq. takes effect unless the vehicle or equipment complies with the standard and is covered by a certification under 49 USCS § 30115. Each vehicle certified as complying with the applicable FMVSS is required to bear a certification label. Among the types of vehicles subject to the prohibition are buses, single unit trucks, truck tractors and truck trailers. Requirements concerning the contents of the certification label and the appropriate placement of the label on the vehicle are set forth at 49 CFR Part 567, *Certification.*

This prohibition applies to new and used vehicles engaged in international transportation of goods or people, as well as to new and used vehicles imported for resale. NHTSA has issued a proposed regulation allowing under certain circumstances for the retroactive certification of Canada- and Mexico-domiciled commercial vehicles that engage in trade in the United States. Two related notices have also been published. Once the rules have been finalized, this handbook will be updated.

**HOW TO IMPORT VEHICLES TO THE UNITED STATES**:

The vehicle must bear a certification label that:

– Was attached by the vehicle manufacturer at the time of the vehicle's manufacture, and certifies that the vehicle complied with all applicable FMVSS in effect at that time.

– If, at the time of its manufacture, the vehicle did not comply with all applicable FMVSS then in effect, petition NHTSA for a determination under 49 CFR part 593 that the vehicle is eligible for importation, on the basis that the vehicle:

> – Is substantially similar to a vehicle which was originally manufactured for importation into and sale in the United States and which bore a certification affixed by its manufacturer pursuant to 49 CFR part 567; and
>
> – Is capable of being readily modified to conform to all applicable Federal Motor Vehicle Safety Standards.

Alternatively, where no U.S.-certified counterpart exists, petition NHTSA for a determination that the vehicle is eligible for importation, on the basis that the vehicle complies with, or is capable of being modified to comply with all applicable FMVSS (based on test information or other evidence that NHTSA decides is adequate).

In either case, the petition may be prepared and submitted by a motor carrier or by a company that has been granted by NHTSA the status of "registered importer" under 49 CFR part 592.

If NHTSA determines that the vehicle is eligible for importation, contract with a registered importer to have the vehicle modified and brought into conformity and certify to NHTSA, upon completion of modifications, that the vehicle has been brought into conformity with all applicable Federal motor vehicle safety and bumper standards, and that it is the person legally responsible for bringing the vehicle into conformity.

**REGISTERED IMPORTERS**: A Registered Importer (RI) is a company registered with NHTSA that brings nonconforming vehicles into compliance and certifies that they comply with the bumper and Federal motor vehicle safety standards. A current list of RIs may be found on NHTSA's website at: http://www.nhtsa.dot.gov/cars/rules/import/gray0012.html. An RI is an independent business and may be selective in the type of work it performs. NHTSA does not endorse or recommend any of the listed RIs nor does it imply or guarantee that any work or service performed will meet the customer's satisfaction.

**For additional information**, see 49 CFR Part 592, *Registered Importers of Vehicles Not Originally Manufactured to Conform to the Federal Motor Vehicle Safety Standards*, 49 CFR Part 593, *Determinations That A Vehicle Not Originally Manufactured to Conform to the Federal Motor Vehicle Safety Standards Is Eligible for Importation*. A summary of the RI process may also be found on NHTSA's website at the following address: http://www.nhtsa.dot.gov/cars/rules/import/gray0012.html.

**DECLARATION OF ELIGIBILITY FOR IMPORTATION**: Once you or your Registered Importer have determined that your vehicle is qualified for importation—either because it was certified as complying with the FMVSS in effect at the time of manufacture or because NHTSA has responded favorably to the petition filed by you or your Registered Importer seeking a determination that your vehicle is capable of being modified to comply with the FMVSS—then you or your Registered Importer must file a form explaining the basis for your vehicle's eligibility. The form, HS-7 is available at all ports of entry as well as on NHTSA's website at: **http://www.nhtsa.dot.gov/cars/rules/import/hs799short.pdf.**

If the basis for the vehicle's import eligibility is that it bears a certification label indicating that it complied with all FMVSS in effect at the time of the vehicle's manufacture, then you or your Registered Importer would simply check off the appropriate box (Box 2A) on form HS-7 and bring the form with you to the port of entry. If, on the other hand, the basis for the vehicle's import eligibility is that NHTSA has determined that the vehicle is capable of being modified to comply with the FMVSS, then you must take the following additional steps prior to attempting to import the vehicle into the United States:

– furnish a bond, form HS-474, in an amount equal to 150 percent of the vehicle's value as determined by the Secretary of the Treasury (Form HS-474 is available on NHTSA's website at: http://www.nhtsa.dot.gov/cars/rules/import/HS-474.pdf);

– execute a contract with a Registered Importer for the purpose of modifying the vehicle to comply with the FMVSS;

– check off the appropriate box (Box 3) on Form HS-7;

– attach a copy of the bond and the contract with the Registered Importer; and

– bring all three documents (the completed Form HS-7, the copy of the bond, and the copy of the Registered Importer contract) with you to the port of entry.

For additional information on importing vehicles determined capable of being modified to comply with the FMVSS, see 49 CFR Part 591.5(f).

## REQUIREMENTS APPLICABLE TO MANUFACTURERS

### General Information

All commercial vehicles used in the United States, including those engaging in cross-border or international transportation and/or the transportation of goods or persons, must have been manufactured in compliance with the Federal Motor Vehicle Safety Standards (FMVSS) in effect at the time the vehicle was manufactured. The FMVSS are promulgated by the National Highway Traffic Safety Administration (NHTSA) and are set out at 49 CFR Part 571.

The FMVSS establish minimum performance requirements for many of the components and systems of heavy trucks and buses, including, but not limited to: instrument panel controls and displays; transmission systems; windshield wiping and washing systems; brakes; lamps, reflective devices, and associated equipment; tires and rims; seat belts; and emergency exits for buses.

The FMVSS are available on the website of the National Archives and Records Administration at the following internet address:
**http://www.access.gpo.gov/nara/cfr/waisidx_00/49cfr571_00.html**

The FMVSS may also be purchased from the Government Printing Office via mail, telephone, facsimile, or website:

Superintendent of Documents
U.S. Government Printing Office
P.O. Box 371954
Pittsburgh, PA 15250-7954
Tel: (866) 512-1800; Fax: (202) 512-2250
Internet: **http://bookstore.gpo.gov**

For additional information please contact:

Office of International Policy and Harmonization
National Highway Traffic Safety Administration
U.S. Department of Transportation
Washington, D.C. 20590
Tel: (202) 366-2114 - Internet: **http://www.nhtsa.dot.gov/cars/rules/international/index.html**

Office of Vehicle Safety Compliance
National Highway Traffic Safety Administration
U.S. Department of Transportation
Washington, D.C. 20590
Tel: (202) 366-2820/5291
Internet: **http://www.nhtsa.dot.gov/cars/testing/procedures/orgchart.html**

**Detailed Information**

**PURPOSE**: To identify relevant Federal statutory provisions and National Highway Traffic Safety Administration (NHTSA) standards and regulations affecting motor vehicle and motor vehicle equipment manufacturers. This information sheet merely highlights the major requirements for manufacturers; each manufacturer and its attorney should consult the specific statutory provisions, regulations, and standards to determine its responsibilities. All NHTSA regulations referred to below can be found in the print volume of Title 49 of the Code of Federal Regulations containing Parts 400-999.

**FEDERAL MOTOR VEHICLE SAFETY STANDARDS (FMVSS) and REGULATIONS**: Title 49 U.S.C. 30101 directs NHTSA to issue safety standards applicable to new motor vehicles and new motor vehicle equipment. All motor vehicles and items of motor vehicle equipment manufactured for sale in or imported into the United States must comply with all applicable safety standards set forth in 49 CFR Part 571, and regulations set out in Part 541, *Motor Vehicle Theft Prevention Standard*, Part 575, *Consumer Information Regulations*, and Part 581, *Bumper Standard*. Manufacturers of these motor vehicles must certify their products' compliance with all applicable FMVSS in effect as of the date of their manufacture in accordance with Part 567, *Certification*.

| Information that must be submitted to NHTSA or placed on product by all motor vehicle or motor vehicle equipment manufacturers (equipment covered by FMVSS) offering products for use in the USA. | | |
|---|---|---|
| **Motor Vehicle or Motor Vehicle Equipment Manufacturers** | **Required Submissions** | **Certification of Compliance** |
| Domestic motor vehicles | Part 565, Part 566 | Must attach Part 567 Certification Label to vehicle |
| **Foreign motor vehicles** | **Part 551.45, Part 565, Part 566** | **Must attach Part 567 Certification Label to vehicle** |
| Domestic manufacturers of seat belts | Part 566 | Must attach manufacturer's information to fabric |
| **Foreign manufacturers of seat belts** | **Part 551.45, Part 566** | **Must attach manufacturer's information to fabric** |
| Domestic manufacturers of brake hose, brake hose assemblies, headlamps, and truck rims | Part 566, plus must file their designation (symbol) with NHTSA | Attach both DOT symbol and manufacturer's designation (symbol) to product |
| **Foreign manufacturers of brake hose, brake hose assemblies, headlamps, and truck rims** | **Part 551.45, Part 566, plus must file their designation (symbol) with NHTSA** | **Attach both DOT symbol and manufacturer's designation (symbol) to product** |
| Domestic manufacturers of glazing, new tires, retreaded passenger car tires | Part 566, plus must obtain an identifier from NHTSA to label products | Attach both DOT symbol and manufacturer's identifier to product |
| **Foreign manufacturers of glazing, new tires, retreaded passenger car tires** | **Part 551.45, Part 566, plus must obtain an identifier from NHTSA to label products** | **Attach both DOT symbol and manufacturer's identifier to product** |

## KEY MOTOR VEHICLE SAFETY REQUIREMENTS

**TIRES and RIMS**: In addition to the safety requirements for tires and rims in FMVSS 109, 117, 119, and 129, manufacturers of tires should also consult Part 569, *Regrooved Tires*, and Part 574, *Tire Identification and Recordkeeping*.

**REAR IMPACT GUARDS FOR HEAVY TRAILERS and SEMI-TRAILERS**: All trailers and semi-trailers with a gross vehicle weight rating of 10,000 pounds or more manufactured after January 1998 are required to have rear impact guards to reduce fatalities and injuries to occupants of light duty vehicles that may strike the rear of these trucks. For additional information regarding the types of vehicles requiring rear impact guards, see 49 CFR Part 571.224, *Rear Impact Protection*. Details regarding the performance requirements for the rear impact guards themselves are contained in 49 CFR Part 571.223, *Rear Impact Guards*.

**REFLECTIVE DEVICES FOR HEAVY TRAILERS and TRUCK TRACTORS**: Certain heavy trailers and truck tractors must be equipped with retroreflective sheeting and/or reflex reflectors in accordance with 49 CFR 571.108, *Lamps, Reflective Devices, and Associated Equipment (Paragraph S5.7, Conspicuity Systems)*. This requirement applies to trailers of 80 or more inches overall width, and with a gross vehicle weight rating over 10,000 pounds, manufactured on or after December 1, 1993, and to truck tractors manufactured on or after July 1, 1997.

## INFORMATION DISSEMINATION REQUIREMENTS

**CONTENT LABELING FOR AUTOMOBILE PARTS**: All manufacturers of new passenger motor vehicles manufactured or imported for sale in the United States must affix a label to each vehicle disclosing information relating to the countries of origin of the vehicle's equipment. Additional information regarding this requirement may be found at 49 CFR Part 583, *Automobile Parts Content Labeling*.

**CONSUMER INFORMATION**: Part 575, *Consumer Information Regulations*, requires manufacturers to make specific information available to consumers, including truck-camper loading, Uniform Tire Quality Grading Standards, and information on the particular handling and maneuvering characteristics of utility vehicles.

**VEHICLE IDENTIFICATION NUMBER (VIN)**: All motor vehicles must have a vehicle identification number (VIN), which is a series of 17 Arabic and Roman characters assigned to a motor vehicle for identification purposes. The first section of the VIN, called the "manufacturer identifier," identifies the motor vehicle's manufacturer, make, and type. Manufacturer identifiers are assigned by the Society of Automotive Engineers and manufacturers wishing to obtain one must send a written request to the following address: Society of Automotive Engineers, 400 Commonwealth Avenue, Warrendale, Pennsylvania 15096, Attention: WMI Coordinator. The second, third, and fourth sections of the VIN are assigned by the manufacturer according to the

instructions found at 49 CFR Part 565.6. Manufacturers are required to provide NHTSA with information regarding how to decipher the characters contained in its VINs. This information must be sent to the following address: National Highway Traffic Safety Administration, 400 Seventh Street, S.W., Washington, D.C. 20590, Attention: VIN Coordinator. Additional information regarding VIN content and reporting requirements is found at 49 CFR Part 565, *Vehicle Identification Number Requirements*.

**MANUFACTURER IDENTIFICATION**: Under 49 CFR 566, *Manufacturer Identification*, a manufacturer of motor vehicles or motor vehicle equipment to which a FMVSS applies must submit information identifying itself and its products to NHTSA no later than 30 days after it begins production of those products.

**DESIGNATION OF AGENT FOR FOREIGN MANUFACTURERS**: Under Part 551.45, *Procedural Rules*, all manufacturers headquartered outside of the United States must designate a permanent resident of the United States as the manufacturer's agent for service of all process, notices, orders, and decisions. This designation should be mailed to the NHTSA Chief Counsel at 400 Seventh Street, S.W., Suite 5219, Washington, D.C. 20590.

## PROHIBITIONS, EXEMPTIONS, DEFECTS & VIOLATIONS

**PROHIBITION ON MAKING MOTOR VEHICLE SAFETY DEVICES INOPERATIVE**: 49 U.S.C. 30122 prohibits manufacturers, distributors, dealers, or motor vehicle repair businesses modifying a new or used vehicle from knowingly making inoperative any part of a device or element of design installed on or in a motor vehicle or item of motor vehicle equipment in compliance with an applicable Federal motor vehicle safety standard.

**TEMPORARY EXEMPTIONS:** 49 U.S.C. 30113 provides limited grounds for NHTSA to grant a motor vehicle manufacturer a temporary exemption from compliance with one or more of the safety standards. The procedures for a temporary exemption are in 49 CFR 555. Exemptions cannot be granted to manufacturers of motor vehicle equipment.

**SAFETY-RELATED DEFECTS AND NONCOMPLIANCES**: 49 U.S.C. 30118 requires manufacturers to notify NHTSA, owners, and dealers if they determine that their products contain safety-related defects and failures to comply with the FMVSS, and to remedy such defects and noncompliances without charge. The following regulations relate to defect and noncompliance notification and remedy campaigns: Part 556, *Exemption for Inconsequential Defect or Noncompliance*; Part 573, *Defect and Noncompliance Reports*; Part 577, *Defect and Noncompliance Notification*; and Part 579, *Defect and Noncompliance Responsibility*. Part 576, *Record Retention*, sets forth requirements for motor vehicle manufacturers' retention of complaints, reports, and other records concerning safety-related motor vehicle malfunctions.

**VIOLATIONS**: Civil penalties of up to $5,000—for a single violation—and up to $15,000,000—for a related series of violations—may be imposed against any person who fails to comply with any statutory or regulatory requirement, or who fails to comply with a NHTSA order.

## FOR ADDITIONAL INFORMATION

**REQUESTS FOR INTERPRETATIONS**: Persons requesting an interpretation of NHTSA regulations and standards should write, call, or e-mail:

Office of the Chief Counsel (NCC-01)
National Highway Traffic Safety Administration
U.S. Department of Transportation
400 Seventh Street, S.W., Room 5219
Washington, D.C. 20590
Tel: (202) 366-9511

**REGULATIONS OTHER THAN SAFETY STANDARDS**: Persons requesting information on motor vehicle emission standards should contact the following:

Office of Transportation and Air Quality
U.S. Environmental Protection Agency
1200 Pennsylvania Avenue, N.W.
Washington, D.C. 20460
Tel: (202) 564-1682
Internet: **http://www.epa.gov/air/transport**

# APPENDIX A

## SYNOPSIS OF FEDERAL MOTOR VEHICLE SAFETY STANDARDS (FMVSS) APPLICABLE TO HEAVY TRUCKS, BUSES, & TRAILERS (GVWR > 4536 kg)

**Disclaimer**: The information expressed below is based on Title 49 of the U.S. Code of Federal Regulations (49 CFR 571) but is not a substitute for it. Please refer to the appropriate safety standard in its entirety. Should you have any questions that require an official answer, please write to:

National Highway Traffic Safety Administration
Office of Chief Counsel, Mail Code NCC-01
400 Seventh Street S.W.
Washington, DC 20590

FMVSS 101, Controls and Displays. Effective: September 1, 1972

Recent changes: none

Requirements for new heavy trucks and buses:

Equipment: if equipped with a control listed in the standard, shall meet the requirements for the location, identification, and illumination of the control. No requirements exist for displays, e.g., hazard warning telltale. Examples of controls: turn signal, windshield defroster, and heating and air conditioning system.
Location: controls must be operable by the driver wearing his/her seat belt.
Identification: symbol, if listed in the standard; wording if stated in the standard.
Illumination: for the controls listed in the standard with some exceptions, e.g., controls that are foot operated or located on the floor, floor console, or steering column, or in the windshield header area. Brightness must be adjustable.

Testing: manufacturer decides.

FMVSS 102, Transmission shift lever sequence, starter interlock, and transmission braking effect. Effective: September 1, 1968

Recent changes: none

Requirements for new heavy trucks and buses:

Equipment: if equipped with an automatic transmission, must have a transmission braking effect, starter interlock, and identification of shift lever positions. If equipped with a manual transmission, must identify the shift pattern. Automatic transmission shift lever identification: the position selected, e.g., drive, and other positions, e.g., neutral, in front of and in clear view of the driver. Manual transmission shift pattern: all except 3-speed, H pattern, in driver's view.

Testing: For automatic transmission braking effect, one gear that provides more braking than the highest speed ratio at speeds less than 40 kph. The vehicle shall have a

automatic transmission starter interlock preventing the engine from starting when the shift lever is in forward or reverse.

FMVSS 103, Windshield defrosting and defogging systems. Effective: January 1, 1968

Recent changes: none

Requirements for new heavy trucks and buses:

Equipment: a defrosting and defogging system.

Testing: manufacturer decides.

FMVSS 104, Windshield wiping and washing systems. Effective: January 1, 1968

Recent changes: none

Requirements for new heavy trucks and buses:

Equipment: power driven windshield wipers and washer system.

Testing: The windshield wiping system must have at least two speeds, one speed at least 45 cycles per minute, a lower speed differing by at least 15 cycles per minute. The windshield washing system must meet SAE J942, November 1965, except the area to be cleared is designated by the vehicle manufacturer.

FMVSS 105, Hydraulic and electric brake systems. Effective: September 1, 1983

Recent changes: brakes must have automatic adjustment, October 20, 1993. Antilock brake system equipment requirement, effective March 1, 1999.

Requirements for new heavy trucks and buses:

Equipment: service brakes on all wheels, automatic adjusters (drum type brakes), and an antilock brake system that directly controls the wheels of at least one front and rear axle.

Testing: Stopping distance tests at fully loaded weight (GVWR) and lightly loaded vehicle weight, with separate tests (1) using the fully functional brake system, (2) with one subsystem failed, and (3) with the power assist inoperative.

FMVSS 106, Brake hoses. Effective: January 1, 1968

Recent changes: none.

Requirements for new heavy trucks, trailers, and buses:

Equipment: aftermarket hoses must be labeled according to the standard.

Testing: the hydraulic, air, and vacuum brake hoses, and brake hose end fittings used in these vehicles must meet performance requirements for constriction, expansion, burst strength, water absorption, ozone resistance, low and high temperature, and other conditions. Tests are typically conducted by the component supplier.

FMVSS 108, Lamps, reflective devices, and associated equipment. Effective: January 1, 1968

Recent changes: Conspicuity systems: trailers must be equipped with retroreflective sheeting and/or reflectors, December 1, 1993; truck tractors, July 1, 1997.

Requirements for new heavy trucks, trailers, and buses:

Equipment: as shown in the wall poster, the lamps, reflective devices, and associated equipment, e.g., retroreflective strips and/or reflex reflectors for the rear of trailers and truck tractors and the side of trailers, must be located as specified in the standard.

Testing: devices meet performance requirements. Tests are typically conducted by the component supplier.

FMVSS 111, Rearview mirrors. Effective: January 1, 1968

Recent changes: none.

Requirements for new heavy trucks and buses:

Equipment: outside mirrors of unit magnification, each with not less than 323 sq cm of reflective surface, on both sides of the vehicle, adjustable both in the horizontal and vertical directions to view the rearward scene.

Testing: manufacturer decides.

FMVSS 113, Hood latch systems. Effective: January 1, 1969

Recent changes: none.

Requirements for new heavy trucks and buses:

Equipment: each hood must have a hood latch system; a front opening hood that could obstruct the driver's view must have a second latch.

Testing: manufacturer decides.

FMVSS 116, Hydraulic brake fluid. Effective: January 1, 1968

Recent changes: none.

Requirements for new heavy trucks, buses, and trailers, if equipped with hydraulic brakes:

Equipment: Fluid used in these vehicles must have been manufactured and packaged according to the requirements in the standard.

Testing: brake fluid used in these vehicles must meet performance requirements for boiling point, high and low temperature, and other conditions. Tests are typically conducted by the component supplier.

FMVSS 119, New pneumatic tires for vehicles other than passenger cars. Effective: March 1, 1975

Recent changes: none.

Requirements for new heavy trucks, trailers, and buses:

Equipment: tires on these vehicles must have required markings, e.g., the symbol DOT certifying that the tire complies with applicable FMVSS, tire identification number, tire size designation, maximum load rating and corresponding inflation pressure, any speed restriction, the number of plies and ply composition, the words "tubeless" or "tube type," "regroovable," and "radial," as applicable, and the letter designating load range.

Testing: tires used on these vehicles must meet performance requirements for endurance, and strength. Tests are typically conducted by the component supplier.

FMVSS 120, Tire selection and rims for motor vehicles other than passenger cars. Effective: August 1, 1976

Recent changes: none.

Requirements for heavy trucks, trailers, and buses:

Equipment: sum of tire load ratings of tires on an axle must be equal to or greater than the axle's GAWR; rims must be permanently marked including size, e.g., 20 x 5.5 (inches) and DOT; a label on the vehicle must display, for each axle, a tire size and inflation pressure appropriate for the GAWR.

Testing: manufacturer decides.

FMVSS 121, Air brake systems. Effective: January 1, 1975; note: stopping distance requirements rescinded effective August 9, 1979, but reinstated as shown below.

Recent changes:

Equipment: Brakes must have automatic adjustment, October 20, 1994. Antilock brake system including malfunction indicator required for truck tractors, March 1, 1997, and for trucks and buses, March 1, 1998. Vehicles that tow another air-braked vehicle shall have an electrical circuit for the other vehicle's ABS. Towing vehicles shall have an electrical circuit for indicating a malfunction in the other vehicle's ABS, March 1, 2001. ABS on trailers and malfunction signal, March 1, 1998, and external malfunction indicator lamp, from March 1, 1998 through end of February 2009.

Testing: stopping distance requirements reinstated and new test for stability and control during braking of truck tractors, March 1, 1997; stopping distance requirements reinstated for trucks and buses, March 1, 1998.

Requirements for new heavy trucks and buses:

Equipment: compressor, reservoirs, towing vehicle protection, pressure gauge, warning signal, ABS with malfunction indicator, brakes on all wheels, automatic brake adjustment with indicator.

Testing: Equipment items listed above, dynamometer test for brakes (not on vehicle), stopping distance at GVWR & LLVW, parking brake by static retardation force or grade holding, brake actuation & release timing, and for truck tractors stability & control stops.

Requirements for new trailers with air brakes:

Equipment: reservoirs, ABS with malfunction signal and external lamp, brakes on all wheels, automatic brake adjustment with indicator.
Testing: Equipment, dynamometer, parking brake, and brake actuation & release timing.

FMVSS 124, Accelerator control systems. Effective: September 1, 1993

Recent changes: none.

Requirements for new heavy trucks and buses:

Equipment: at least two sources of energy returning throttle to idle.

Testing: Time to return to idle under normal conditions and with one severance in the system = 2 seconds (ambient temperature) and 3 seconds (-18 to –40 degrees C)

FMVSS 205, Glazing materials. Effective: January 1, 1968

Recent changes: none.

Requirements for new heavy trucks and buses:

Equipment: must be labeled as to type, e.g., windshields must be marked "AS-1."

Testing: must meet the requirements of ANSI Z-26-1-1977. Tests are typically conducted by the component supplier.

FMVSS 206, Door locks and door retention components. Effective: January 1, 1972

Recent changes: none.

Requirements for new heavy trucks:

Equipment: side doors must have a fully latched and a secondary latched position.

Testing: Latches in side doors must meet longitudinal, transverse, and inertia load requirements. Door hinges must meet longitudinal and transverse load requirements.

FMVSS 207, Seating systems. Effective: January 1, 1972

Recent changes: none.

Requirements for new heavy trucks (all seating positions) and buses (driver's seat only):

Equipment: vehicle must have a driver's seat; a hinged or folding seat must have a self-locking device.

Testing: Forces equal to 20 times the weight of the seat are applied forward and rearward through the cg of the seat. Additionally, a rearward moment, 373 N-m is applied to the

upper cross member of the seat back. Also, if seat belts are anchored to the seat, loads defined in FMVSS 210 are applied simultaneously with forward loads.

FMVSS 208, Occupant crash protection. Effective: January 1, 1972

Recent changes: none.

Requirements for heavy trucks (all seats) and buses (driver's seat only):

Equipment: each seat shall be equipped with a Type 1 (lap) or Type 2 (lap and shoulder) seat belt assembly that conforms to FMVSS 209. Seat belt assembly includes either an emergency locking retractor or automatic locking retractor. If an automatic locking retractor is used on a suspension seat, it must be attached to the seat structure.

Testing: manufacturer decides.

FMVSS 209, Seat belt assemblies. Effective: March 1, 1967

Recent changes: none.

Requirements for new heavy trucks and buses:

Equipment: each seat belt assembly shall be for use by one person and must be adjustable to fit a range of occupant sizes from 5$^{th}$ percentile females to 95$^{th}$ percentile males; labeled as to date of manufacture, model no, and trademark of manufacturer, distributor, or importer.

Testing: seat belt assemblies used in these vehicles must meet performance requirements for webbing width, breaking strength, resistance to environmental conditions, buckle release, retractor endurance, and other conditions. Tests are typically conducted by the component supplier.

FMVSS 210, Seat belt assembly anchorages. Effective: July 1, 1971

Recent changes: none.

Requirements for new heavy trucks (all seating positions) and buses (driver's seat only):

Equipment: anchorages located in the vehicle must be within the dimensions and angles stated in the standard, referenced from the seating reference point; anchorages for each seat belt assembly shall be at least 165 mm apart.

Testing: anchorages shall withstand a force of 22,241N applied to a Type 1 seat belt assembly or 13,345 N applied to the lap belt and shoulder belt portions of a Type 2 seat belt assembly.

FMVSS 217, Bus emergency exits and window retention and release. Effective: September 1, 1973

Recent changes: none.

Requirements for new heavy buses other than school buses:

Equipment: Total emergency exit area (unobstructed openings for emergency exits) in sq cm must be at least 432 times the number of designated seating positions on the bus; at least 40 percent of the total area shall be on each side of the bus; no single exit is credited with more than 3,458 sq cm; each bus shall have a rear exit unless the bus configuration precludes one, then the bus shall have a roof exit in the rear half of the bus; emergency exits can have one or two release mechanisms, and at least one must be operated in a different direction from the motion to open the exit by 90-180 degrees; each exit shall be labeled emergency exit or emergency door and provide operating instructions.

Testing: window retention for each window large enough to pass a 102 mm (4 inch) diameter sphere shall meet one of the following conditions (1) a load of 5,338 N (1,200 lb) is achieved, (2) 80 percent of the glazing is cracked or shatters, or (3) the inner surface of the glazing moves inward the distance specified; the force to operate the emergency exit release shall not exceed 89 N (located in a low force region specified in the standard) or 267 N (in the high force region). The exit shall open to permit passage of an ellipsoid 50 cm x 33 cm, using a force not to exceed 89 N (low force region) or 267 N (high force region).

FMVSS 223, Rear impact guards. Effective: January 26, 1998

Recent changes: none.

Requirements for new trailers:

Equipment: guard shall be permanently labeled, e.g., manufacturer's name and address, month and year of manufacture, and must be certified by the symbol DOT, and located as specified in the standard; installation instructions shall be provided specifying the vehicles on which it can be installed and the method to properly install it.

Testing: requirements include the maximum deflection for specified force applications. Also, minimum energy absorption requirements are specified.

FMVSS 224, Rear impact protection. Effective: January 26, 1998

Recent changes: none.

Requirements for new trailers:

Equipment: rear impact guard meeting FMVSS 223 shall be installed. Location and dimensional requirements are specified. Some trailers are excluded.

Testing: manufacturer decides.

FMVSS 302, Flammability of interior materials. Effective: September 1, 1972

Recent changes: none.

Requirements for new heavy trucks and buses:

Equipment: any single or composite material located within 13 mm of the occupant compartment air space shall meet performance requirements.

Testing: samples shall not burn, nor transmit a flame front across its surface, at a rate of more than 102 mm per minute. Tests are typically conducted by the component supplier.

FMVSS 304, Compressed natural gas fuel container integrity. Effective: March 27, 1995

Recent changes: none.

Requirements for new heavy trucks and buses if operated using CNG:

Equipment: each CNG fuel container shall be labeled with the manufacturer's name, address, and telephone number, month and year of manufacture, service pressure, and other informational statements. It must also be certified with the symbol DOT.

Testing: CNG containers are tested as follows: pressure cycling, hydrostatic burst, and in a bonfire. Tests are typically conducted by the component supplier.

## Appendix B

## FMVSS applicable to heavy trucks (GVWR > 4536 kg)

| FMVSS No. | TITLE | TEST OR INSPECT NHTSA | Manufacturers |
|---|---|---|---|
| 101 | Controls and displays | Inspect | Inspect |
| 102 | Transmission shift lever sequence | Inspect | Test |
| 103 | Windshield defrosting and defogging | Inspect | Test (SAE) |
| 104 | Windshield wiping and washing | Test | Test |
| 105 | Hydraulic and electric brake systems[1] | Test | Test |
| 106 | Brake hoses | Test | Test* |
| 108 | Lamps, reflective devices, and associated equipment | Test | Inspect, Test* |
| 111 | Rearview mirrors | Inspect | Test (SAE) |
| 113 | Hood latch systems | Inspect | Inspect |
| 116 | Hydraulic brake fluids (see footnote 1) | Test | Test* |
| 119 | New pneumatic tires for vehicles other than passenger cars | Test | Test* |
| 120 | Tire selection and rims for vehicles other than passenger cars | Test | Test |
| 121 | Air brake systems[2] | Test | Test** |
| 124 | Accelerator control systems | Test | Test |
| 205 | Glazing materials | Inspect | Test* |
| 206 | Door locks and retention components | Test | Test** |
| 207 | Seating systems | Test | Test |
| 208 | Occupant crash protection | Inspect | Inspect |
| 209 | Seat belt assemblies | Test | Test* |
| 210 | Seat belt assembly anchorages | Test | Test |
| 302 | Flammability of interior materials | Test | Test* |
| 304 | CNG tanks[3] | Test | Test** |

*Test usually done by component supplier
**Tests performed by vehicle manufacturer and/or component or sub-system supplier

[1] If equipped with hydraulic brakes
[2] If equipped with air brakes
[3] If the engine is powered by CNG

## FMVSS applicable to heavy buses[2] (GVWR > 4536 kg)

| FMVSS No. | TITLE | TEST OR INSPECT NHTSA | Manufacturers |
|---|---|---|---|
| 101 | Controls and displays | Inspect | Inspect |
| 102 | Transmission shift lever sequence | Inspect | Test |
| 103 | Windshield defrosting and defogging | Inspect | Test (SAE) |
| 104 | Windshield wiping and washing | Test | Test |
| 105 | Hydraulic and electric brake systems[3] | Test | Test |
| 106 | Brake hoses | Test | Test* |
| 108 | Lamps, reflective devices, and associated equipment | Test | Inspect, Test* |
| 111 | Rearview mirrors | Inspect | Test (SAE) |
| 113 | Hood latch systems | Inspect | Inspect |
| 116 | Hydraulic brake fluids (see footnote 1) | Test | Test* |
| 119 | New pneumatic tires for vehicles other than passenger cars | Test | Test* |
| 120 | Tire selection and rims for vehicles other than passenger cars | Test | Test |
| 121 | Air brake systems[4] | Test | Test** |
| 124 | Accelerator control systems | Test | Test |
| 205 | Glazing materials | Inspect | Test* |
| 207 | Seating systems | Test | Test |
| 208 | Occupant crash protection | Inspect | Inspect |
| 209 | Seat belt assemblies | Test | Test* |
| 210 | Seat belt assembly anchorages | Test | Test |
| 217 | Bus emergency exits and window retention | Test | Test** |
| 302 | Flammability of interior materials | Test | Test* |
| 304 | CNG tanks[5] | Test | Test** |

*Test usually done by component supplier
**Tests by vehicle manufacturer and/or component or sub-system supplier

[2] School buses have additional FMVSS that apply
[3] If equipped with hydraulic brakes
[4] If equipped with air brakes
[5] If the vehicle's engine is powered by CNG

## FMVSS applicable to trailers (GVWR > 4536 kg)

| FMVSS No. | TITLE | TEST OR INSPECT NHTSA | Manufacturers |
|---|---|---|---|
| 106 | Brake hoses | Test | Test* |
| 108 | Lamps, reflective devices, and associated equipment | Test | Inspect, Test* |
| 116 | Hydraulic brake fluids[6] | Test | Test* |
| 119 | New pneumatic tires for vehicles other than passenger cars | Test | Test* |
| 120 | Tire selection and rims for vehicles other than passenger cars | Test | Test |
| 121 | Air brake systems[7] | Test | Test** |
| 223 | Rear impact guards | Test | Test** |
| 224 | Rear impact protection | Inspect | Inspect |

*Test usually done by component supplier
**Tests performed by vehicle manufacturer and/or component or sub-system supplier

[6] If equipped with hydraulic brakes
[7] If equipped with air brakes

# IMMIGRATION REQUIREMENTS FOR RAIL, MOTOR CARRIER AND PASSENGER OPERATORS

**Temporary Visitors for Business**

Alien motor carrier operators may apply for admission to the United States as visitors for business (B-1), and must meet the general entry requirements set forth in the Immigration and Nationality Act of 1952 (INA) and the Department of State regulations.

-- The alien must have a residence in a foreign country which he or she has no intention of abandoning.

-- The alien must intend to depart the United States at the end of the authorized period of temporary admission.

-- The alien must have adequate financial means to carry out the purpose of the visit to and departure from the United States.

-- The alien must establish that he or she is not inadmissible from the United States under the provisions of Section 212(a) of the INA, which includes such grounds of inadmissibility as health-related, criminal, subversive, public charge, improper manner of arrival or improper documents, and several other categories of ineligibility.

**Documentary Requirements**

**Canadian Citizens**

Canadian citizens entering the United States as visitors for business do not require either a passport or a visa. Each applicant for admission is required to satisfy the inspecting officer of his or her citizenship. Generally, an oral declaration may be accepted or the inspecting officer may request supporting documentation. Such documentation may include, but is not limited to, a passport (valid or expired), a birth certificate, or a certificate of citizenship. Under heightened security procedures, all travelers may be required to present photo-identification

**Mexican Citizens**

All Mexican citizens entering the United States as visitors for business are required to present a valid passport and non-immigrant visa or lieu document(s). These requirements may be satisfied in one of two ways:

- A valid Mexican passport containing a valid B-1/B-2 non-immigrant visa obtained at a U.S. Consulate. Consulates in Mexico also issue a combination B-1/B-2 visa and Mexican Border Crossing Card that serves the same purpose.

- Form DSP-150, "Laser Visa", a credit-card style document that is both a Border Crossing Card and a B1/B2 visitor's visa obtained by applying at a U.S. Consular post in Mexico.

The Laser Visa may be obtained by applying at one of the following U.S. Consular posts in Mexico: Mexico City, Ciudad Juarez, Guadalajara, Hermosillo, Merida, Matamoros, Monterrey, Nogales, Nuevo Laredo, Tijuana, and at the Tijuana and Mexicali Temporary Processing Facilities. In Mexico, visa information is available by calling 01-900-849-3737 or on the U.S. Embassy Internet homepage at **www.usembassy.org.mx**.

**Admission Procedures**

Mexican citizens meeting these basic documentary requirements, who are otherwise admissible, may be issued additional documents by the immigration inspectors at the port of entry (POE), depending upon the length of intended stay and the distance to be traveled.

- If entering for a period not to exceed 72 hours to travel within 25 miles of the border (in the states of Arizona, California, Nevada, New Mexico or Texas), no additional document is issued.

- If entering at the Mexican border POEs in the State of Arizona at Sasabe, Nogales, Mariposa, Naco or Douglas for a period not to exceed 72 hours and/or 75 miles from the border, no additional document is issued.

- If entering for more than 72 hours or to travel beyond 25 miles of the Mexican border, the applicant will be issued Form I-94, Arrival/Departure Form. This may be issued for multiple entries. This form is simple to complete and is available in the Spanish language. To expedite processing, transportation companies involved in deliveries to destinations beyond the border state area may obtain blank Forms I-94 and complete them before arriving at the POE.

**Fees**

Payment of a service fee is required for issuance of certain forms and applications required by non-immigrants entering the United States at all land border ports on the northern and southern border of the United States. The amount of the fee is subject to change.

Form I-94 (Arrival/Departure Form) - $6.00/visitor

**Distribution**

Motor carrier operators are eligible for admission as business visitors if they are transporting passengers or delivering goods loaded in Canada or Mexico to the United States. They may also load goods or cargo, or pick up passengers in the United States for transportation to Canada or

Mexico. Cargo that is both loaded and delivered in the United States does not qualify as international cargo. The transportation of passengers that are both picked up and dropped off in the United States does not qualify as international movement, and is not permissible. The entry of the driver must be for the purpose of an international movement. An international movement would require either a point of origin or destination in Canada or Mexico. Cabotage, or point-to-point loading or delivery of goods, or movement of passengers within the United States, is not permissible as a B-1.

To promote highway safety or address emergency situations only, back-up or relay drivers employed by the same company may be used on domestic segments of the trip. They need not enter the United States with the vehicle, provided the domestic portion is incidental to the international nature of the trip. The goods or cargo must have either a point of origin or destination in Canada or Mexico. Relay drivers must enter within a reasonable time before or after the vehicle enters the United States.

Although rail operators may generally be classified as B-1 visitors for business, the same restrictions apply to rail transportation operators as to motor carrier operators. Therefore, a crew member on board a train which takes on cargo in the United States and unloads some or all of the same cargo within the United States would not be eligible for admission as a business visitor, even though the train might also be conveying some cargo across an international boundary.

It is important to note that the NAFTA provisions and the immigration statutes governing the entry of drivers are more restrictive than those statutes under which the U.S. Customs Service and Department of Transportation regulate the entry of foreign-based commercial vehicles. The fact that foreign equipment may be permitted under Department of Transportation or Customs Service regulations to operate within the United States in domestic service does not permit the employment of foreign drivers who are not authorized by INS to accept employment in the United States.

**Activities not Permitted**

Drivers may not reposition an empty trailer between two points in the United States when the driver did not either enter with or depart with that trailer. Drivers may not pick up goods at one U.S. location and deliver those goods to another U.S. location. Drivers may not "top up" an international shipment with U.S. domestic shipments. Drivers may not directly solicit shipments for deliveries while in the United States.

**Charter and Tour Bus Companies**

In addition to the above, employees of Mexican charter and tour bus companies operating in the United States must present:

- Documentation showing that the person is employed by the company and describing the charter and tour bus service that will be provided; and

- Evidence demonstrating that the proposed activity is international in scope, and that the person is not seeking to enter the U.S. labor market, which may be shown by establishing that:

  - The primary source of remuneration for the proposed activity is outside the United States;

  - The tour bus company's principal place of business and actual place of accrual of profits is predominantly in Mexico or Canada.

**Tour bus operators may enter the United States**:

- With a group of passengers on a bus tour that has begun in, and will return to, Mexico or Canada;

- To meet a group of passengers on a bus tour that will end, and the predominant portion of which will take place in Mexico or Canada; or

- With a group of passengers on a bus tour to be unloaded in the United States, and returning to Mexico or Canada with no passengers or reloading with the same group for transportation to Mexico or Canada.

**Numbers to Call**:

Customers can call the INS **National Customer Service Center** toll-free for automated information and for live assistance concerning immigration services and benefits.

The number is: 1-800-375-5283
The TDD number for the hearing impaired is: 1-800-767-1833

**Hours of Operation**

Customers can access automated information through a menu of automated options, 24 hours a day, 7 days a week. During regular business hours, customers who need more information or assistance can be transferred to a Customer Service Representative (CSR).

Live assistance is available Monday through Friday for customers calling from anywhere within the United States: 8:00 AM to 6:00 PM local time. The best times to call the NCSC for personal assistance are Tuesday through Friday.

Automated Services and Live Assistance Customers can access automated information through a menu of automated options, 24 hours a day, 7 days a week.

Customers can also visit the INS Internet Website at **http://www.ins.usdoj.gov** for additional information.

# CUSTOMS REQUIREMENTS

Trucks and buses that are based outside the United States that are engaged in international traffic, arriving with cargo destined for points in the United States or arriving empty for the purpose of being loaded in the United States and then taking out such merchandise, may be admitted without formal entry or payment of duty. All cargo must be manifested on a Customs form (CF 7533), Inward Cargo Manifest. In addition, the imported cargo will be subject to Custom entry filing and payment of any applicable duties, taxes and fees, either at the Customs border port or at the Customs interior port, as appropriate. Customs entry filing also applies to Mexican goods transiting the United States for final destinations in Canada. However, duties, taxes and fees would not be applicable in this case.

Foreign-based trucks and buses that are admitted to the United States without formal entry and payment of any applicable duty may not carry cargo from one point in the United States to another point in the United States, unless such carriage is incidental to the immediately prior or subsequent engagement of that vehicle in international traffic. Any such carriage by the vehicle in the general direction of an export move or as part of the return of the vehicle to its base country shall be considered incidental to its engagement in international traffic.

Drivers are responsible for payment of a Customs User Fee. On the Northern border, a yearly decal may be purchased for $100 or drivers may instead pay a fee of $5 for each crossing. On the Southern border, the yearly decal's total cost is $190, or drivers may instead pay a $9.50 fee for each crossing. Customs fees are actually the same at both borders, but on the Southern border the U.S. Customs Service collects an additional user fee for the U.S. Department of Agriculture's Animal and Plant Health Inspection Service (APHIS), which accounts for the difference in total charges.

Any cargo carried aboard a bus also must be manifested on a Customs Form (CF 7533) and the cargo will be treated the same as cargo carried by truck, requiring the same filings and payments of applicable duties, taxes and fees that are listed above. Buses used for the transportation of commercial merchandise also are subject to the Customs User Fee and must purchase a yearly decal for $100 or pay the $5 fee at the border crossing.

Additional information can be obtained by telephoning **1-877-CUSTOMS** or on the U.S. Customs Service's web site: **http://www.customs.gov.** For more information a complete list of U.S. Customs Ports of Entry can be found on the internet at the same web site by selecting "Importing and Exporting", select "Office Locations" at the top of the page, and then select "Ports of Entry." This will provide current port addresses, phone and fax numbers and hours of operation for the port.

# AGRICULTURAL PRODUCTS TRADE REQUIREMENTS

Two agencies from the U.S. Department of Agriculture have border operations overseeing agricultural trade, the Animal and Plant Health Inspection Service (APHIS) and the Agricultural Marketing Service (AMS).

## APHIS' Border Operations

The mission of APHIS with regard to border operations is first to prevent the introduction and establishment of exotic plant and animal pests and diseases into the United States, and second to enforce foreign and domestic plant quarantine regulations while facilitating the entry of U.S. agricultural products into international markets.

To fulfill its mission, APHIS conducts cargo and vehicular inspections (private and commercial) at both land borders of the United States. It also inspects several million pedestrians a year at both land borders. Consequently, all agricultural cargo entering the United States is subject to inspection. APHIS also inspected several thousand railcars annually mostly used in the movement of grains and oilseeds. Due to the increased volumes of cargo, pedestrians, and vehicles, APHIS has established an Agricultural Quarantine Inspection Monitoring (AQIM) program.. APHIS randomly selects pedestrians, vehicles, and cargo for an intensive examination. From the results of these statistical samples, APHIS can shift its resources to inspect higher risk pedestrians, vehicles, and cargo.

Additionally, APHIS also issues phytosanitary certifications for U.S. cargoes exported to Mexico and Canada.. In support of this mission, APHIS has several hundreds inspectors located at the land border crossing operations. APHIS staffs the largest Canadian border ports and relies on the U.S. Customs Service (USC) and the U.S. Immigration and Naturalization Service (INS) to check for agricultural material at the lower risk ports. All but the smallest ports at the U.S.-Mexico border are staffed by APHIS personnel.

## AMS' Border Operations

The mission of AMS with regard to border operations is first to ensure compliance with the minimum grade and size requirements for imported commodities regulated under Section 8e of the Agricultural Marketing Agreement Act of 1937, second to provide voluntary grading services upon the request of financially-interested parties to determine compliance with purchase contracts or for quality assurance purposes, and third to monitor and provide technical assistance on the cross-border movement of U.S. agricultural exports to Canada and Mexico.

AMS manages a border inspection, grading, and certification program for produce imported from Mexico into the United States. This program is based on the need to ensure compliance on certain imported commodities with the minimum grade and size criteria of the Agricultural Marketing Agreement Act of 1937 and to provide voluntary grading services as requested under the Agricultural Marketing Act of 1946. Although AMS inspects and certifies imported Mexican

produce at locations all along the U.S.-Mexico border, the only border location at which AMS grading and certification affects border interchange is at Nogales, Arizona. At all other ports, AMS grading and certification activities are performed in U.S. produce-receiving facilities located away from the border.

Nogales, Arizona is the major entry point for Mexican produce imported into the United States, transported in refrigerated truck-trailers, trailers-on-flatcar rail service, or railcars. Produce loads are partially unloaded to allow access for unrestricted inspection by AMS. Most truck-trailers are unloaded at a dock operated by a grower association for the State of Sinaloa. Piggyback trailers are unloaded at a Mexican government-operated railroad dock. Both facilities are located approximately five miles south of the border. The remainder of the truck-trailers are inspected at importers' premises in Nogales, Arizona. Once unloaded samples of produce are selected and graded by USDA-licensed Federal/State graders from Arizona.

Mexican tomatoes, for example, are inspected for quality, condition, and size. This inspection ensures compliance with minimum grade and size criteria authorized under Section 8e of the Agricultural Marketing Agreement Act of 1937, which requires imported tomatoes to meet any quality standards imposed on domestic shipments under a marketing order. Import regulations also set requirements for minimum grade, size, maturity, and inspection of citrus, onions, and table grapes. Produce may be graded on a voluntary basis to provide Mexican shippers and U.S. importers a basis for trading even when not required by import regulations.

After a USDA-licensed grader completes an inspection, a certificate is issued certifying the grade and whether the produce meets or fails to meet U.S. import regulations, if applicable. Once a produce load inspected in Mexico meets quality requirements, it proceeds to the U.S.-Mexico border for clearance by Mexican Customs, U.S. Customs, APHIS, and the U.S. Food and Drug Administration.

AMS provides technical assistance on the cross-border movements of U.S. agricultural exports to Canada and Mexico. The program objective is the promotion of U.S. agricultural exports to our NAFTA partners by offering technical expertise to solve transportation and border interchange inefficiencies. Assistance is provided on a one-to-one basis by technical experts to shippers; economic research and/or marketing studies are also conducted on transportation and logistical impediments to exporting U.S. agricultural products to these countries. The primary beneficiaries of this program are small to medium-size U.S. agricultural businesses who are beginning to export to Canada or Mexico or who do not have the scale of operation large enough to support specialized traffic and transportation personnel on staff.

**Monitoring of Vehicles and Cargo**

APHIS monitors the number of vehicles inspected, the number of vehicles rejected for entry, as well as the basis for the rejection, and its location at the Canadian and Mexican borders. Cargo inspections on the Mexican and Canadian borders are completed quickly with few delays and are free of charge for eight hours a day, Monday through Friday. However, officers are usually

available to clear cargo on weekends and after hours on reimbursable overtime. AMS monitors the number of truckloads and railcars of imported Mexican produce that is inspected and certified at border inspection stations. Since grain is the principal agricultural commodity exported from the U.S. to Mexico. AMS monitors the total number of railcars crossing in both directions through the border, as well as the number of railcars of U.S. grain exported to Mexico. Since APHIS introduced pre-documentation of cars before they arrive at the border as part of their border inspection requirements, daily railcar throughput through Laredo/Nuevo Laredo has increased significantly over the past several years.

**Modernizing the Inspection Process**

APHIS has implemented several programs to improve the efficiency of its border operations in recent years. For instance, the Border Cargo Release (BCR) Program was established to expedite the entry of Mexican fruits and vegetables into the United States. APHIS has identified the Mexican fruits and vegetables with the highest volume and lowest pest risk for inclusion in the program. After inclusion, the number of fruits and vegetables inspected shipments fell from almost 100 percent to less than 5 percent without compromising quarantine goals. Most trucks carrying BCR commodities are not required to stop at the APHIS inspection dock.

Additionally, APHIS border operations have also been enhanced by the implementation of the Automated Manifest System (AMS), the Automated Broker Interface (ABI), and the Line Release Program. APHIS continues working closely with the U.S. Customs to determine how their electronic programs can further expedite the movement of agricultural products, help control ship movement, and serve as a common reporting tool.

APHIS is expanding its inspection operations by instituting an inland inspection program whereby certain low-risk commodities will inspected at certain designated sites, including the importer's premises. Currently, inland sites have been set up at New Orleans, Kansas City, Dallas, and Chicago.

APHIS is also exploring new technologies such as Radio-Frequency seals to track cargoes into and through the United States.

APHIS has implemented "The Beagle Brigade," a program using dogs to find prohibited agricultural products. These dogs are non-threatening and people-friendly and the program has been used very successfully to expedite clearance of air passengers. Finally, X-Ray machines are in use by APHIS at San Diego, Otay Mesa, and Calexico for the clearance of pedestrians.

APHIS has modified its inspection requirements at the border in recent years as certain types of traffic have been shown to have a minimal risk of contamination and as cross-border railroad operations have changed. Tank cars have always been exempted from inspection because of their low risk of contamination. Finally, most U.S. hopper cars which can be shown to have been in Mexico only a short period of time are given only a cursory inspection by APHIS because of the low probability that they could have been used in Mexico to move Mexican wheat.

AMS has maintained its inspection and certification program of Mexican produce on the Mexican side of the border at Nogales so as to present as minimal disruption to cross-border interchange as possible. AMS inspection procedures at the border are also reviewed and modified periodically as to present as little burden on normal commercial flows through the border as possible.

**Coordination with other Domestic and International Agencies**

Cooperation between the Federal Inspection Service (FIS) agencies that participate in working committees to evaluate bridges and border crossing, air passenger processing, cargo entry, and rail crossing at both borders and it s foreign counterpart is good. Along the Canadian border in the Northeast, APHIS and Canadian officials cooperate closely in efforts to expedite cross-border movement of regulated commodities. At the international level, APHIS regularly holds bilateral meetings with agricultural officials representing the governments of Canada and Mexico. These meetings help resolve phytosanitary issues and facilitate agricultural inspections among the three countries.

On the Mexican border, quarterly meetings are held between Mexican phytosanitary authorities and APHIS representatives. The International Services unit of APHIS also sets up and coordinates programs in Mexico to expedite the entry of agricultural commodities into the United States.

AMS regularly discusses border inspection procedures with local and Federal representatives of the Mexican Government. AMS has been a U.S. government liaison with the Mexican Government agencies responsible for grain imports, in a cooperative effort to coordinate overland grain movements from the U.S. into Mexico and to minimize border problems with regard to these shipments. AMS maintains contacts with the National Railroads of Mexico with regard to the efficiency of cross-border rail interchange.

**AMS Programs**

The Fruit and Vegetable Programs provide assistance to the U.S. produce industry in many ways, including the grading and inspection of fresh and processed commodities, the exchange of price and movement data, the enforcement of fair-trading laws and the oversight of industry-operated programs. These services are primarily provide to assist domestic producers, shippers, brokers and receivers in successfully market their valuable commodities.

**International Grades and Standards**

Members of the AMS' Fruit and Vegetable Programs participate in the North American Free Trade Agreement's (NAFTA) Working Group on Agricultural Grading and Marketing Standards. This working group consists of agriculture officials from Canada, Mexico and the United States dealing with fruit and vegetable grades and standards issues, attempting to homogenize the grading and marketing programs of all three countries. The working group reviews each country's

grades and standards programs, the effects the programs have on trade, and all other issues related to grades and standards. Since its inception in 1997, the working group has continuously improved the understanding of import requirements of each country.
International Market News: The AMS' Fruit and Vegetable Programs have market news reporters stationed at prominent U.S. growing regions and distribution points collecting, analyzing and disseminating movement and price information about fruits, vegetables, and specialty crops. With this information industry participants are able to decide the most advantageous time and place to ship their commodities to market. Since 1992, the program has published The International Market News Report containing volume and price information on internationally traded fruit, vegetable, and specialty crops. The report can be accessed at: **http://www.ams.usda.gov/fv/mncs/intfv.htm**

NAFTA Tri-National Dispute Resolution Program: Officials of AMS' Fruit and Vegetable Programs assisted industry and other government officials from Canada, Mexico, and the United States in developing the Fruit and Vegetable Dispute Resolution Corporation, currently based in Ottawa, Ontario, Canada. This membership-run organization governs a Perishable Agricultural Commodities Act (PACA)-like program that encourage fair-trading practices among the three NAFTA countries. The program, which began operation in February 2000, provides an incentive for participation which results in greater assurance of reputable business behavior to suppliers and customers.

The North American Plant Protection Organization (NAPPO) Phytosanitary Standard
The NAPPO is an international plant protection organization created in 1993 to provide guidance for conducting pest risk analyses. NAPPO's Executive Committee members representing the United States, Mexico, and Canada, approved the Phytosanitary standard on April 28, 1998. The standard measures are subject to periodic review and amendments its next review date is set for April, 2003. For complete details about the North American Plant Protection Organization (NAPPO) Standard for Phytosanitary visit:
**http://www.nappo.org/menu_s.shtml**
**http://www.nappo.org/menu_e.shtml**

APHIS - Import Authorization System (IAS) IAS currently allows customers to submit applications to import fruits & vegetables and animal products, organisms, and vectors online, as well as check the status of an existing application and submit revisions to an existing application at the following location: **http://www.aphis.usda.gov/NCIE/fac_imp.html.** At this site by selecting the appropriate item number under the general information heading, the customer will also be able to check the status of the Veterinary Services application, submit revisions, renewals and/or amendments to their existing permits. A user can also review the appropriate guidelines and user fee requirements and schedules for Animal Products to determine the need for a permit and to avoid unnecessary user fees or delays.

# OTHER FEDERAL REQUIREMENTS

## U.S. Department of Labor

There are a number of U.S. labor standards that apply to those who engage in the carriage of goods and people in international commerce between the United States and foreign countries. The liberalization provisions of surface transportation services under Chapter Twelve of the North American Free Trade Agreement (NAFTA) gradually remove restrictions affecting motor carrier services. When the agreement is fully implemented, transportation operators and crews may work in the territory of a foreign country for temporary, but significant periods of time, in order to handle a growing volume of internationally traded goods.

Truck and bus drivers and other cross-border transportation workers will work on the basis of a labor contract negotiated with their employers under the laws of their country of origin. However, they will perform a significant part of their duties in the country of their admission. Provision of services under these circumstances must take into account the laws and regulations pertaining to labor and transportation in both countries.

### Conditions of Employment/Labor Standards

### Applicable Law and Practice

The U.S. Department of Labor administers federal labor laws that apply to foreign commercial vehicle operators and their helpers who work in United States territory. Important statutes that directly apply to these persons include the *Fair Labor Standards Act* 29 U.S.C. 201 *et seq.* and the *Occupational Safety and Health Act of 1970* 29 U.S.C. 651 *et seq.*

The Labor Department applies the minimum wage (which currently requires wages of $5.15 per hour) and child labor provisions of the Fair Labor Standards Act to foreign drivers and their helpers working in the United States for a substantial period of time (i.e., travels more than 25 miles from the U.S. border or spends more than 72 hours in the U.S. on a single visit to this country). Wages for all hours worked must be paid free and clear of impermissible deductions -- that is, deductions that reduce pay below the Federal minimum -- for the costs of operating the vehicle or traveling on the road. Such impermissible deductions reducing pay below the Federal minimum wage include the cost of gas, oil, tires, repairs to the truck, tolls or the cost of food or lodging for the employees while they are traveling. For all hours worked in the U.S., complete payroll records must be maintained by the employer; the records must be made available to the Department of Labor upon request. The child labor provisions restrict persons under 18 years of age from working as drivers or helpers. Hours worked and age requirements for commercial drivers licenses are regulated by the U.S. Department of Transportation.

For additional information contact:

Michael Ginley, Wage and Hour Division
U.S. Department of Labor, Rm. S-3510
200 Constitution Ave., N.W.
Washington, D.C. 20210
Telephone (202) 693-0563

Internet Website: http://www.dol.gov/dol/esa/public/whd_org.htm,
and Toll Free Help Line: 1-866-4US-WAGE (1-866-487-9234).

The Occupational Safety and Health Act, which is administered by the Occupational Safety and Health Administration (OSHA), requires employers to comply with specific safety and health standards and with a general duty to provide employment free from recognized, serious hazards. The OSH Act applies to some, but not all, of the working conditions of foreign drivers when they are in the United States. In general, most of the safety hazards connected with over-the-road operation of commercial motor vehicles (which include vehicles with a gross vehicle weight or rating exceeding 10,001 pounds or 4537 kg and buses carrying passengers for hire) are regulated by the U.S. Department of Transportation (DOT) rather than by OSHA. OSHA requirements apply to vehicles that do not meet DOT's definition of a commercial motor vehicle, such as most small trucks. In addition, OSHA's hazardous materials requirements apply to a vehicle (of any size) used to transport hazardous materials in a quantity requiring placarding under DOT regulations. Finally, OSHA requirements, other than recordkeeping under 29 C.F.R. Part 1904, apply to any safety or health hazard that is not regulated by DOT, such as those arising during freight terminal operations or vehicle servicing. In 21 states, safety and health enforcement is conducted by the states under OSHA-approved Plans. In general, state enforcement is closely similar to that of federal OSHA although there may be differences in requirements from state to state.

For additional information:

Office of Public Affairs
Occupational Safety and Health Administration
200 Constitution Ave., N.W.
Washington, D.C. 20210
(202) 693-1999

OSHA Internet website: http://www.OSHA.gov
OSHA toll-free hotline: (800) 321-OSHA (800-321-6742)

# HEAVY VEHICLE USE TAX

One of the sources of highway funding construction in the United States is the Federal Vehicle Use Tax, commonly known as the Highway Use Tax. While historically this tax was paid only by U.S. cargo and passenger motor carriers, a change to the law in 1987 resulted in Canadian and Mexican motor carriers being subject to the tax at a reduced rate.

**Internal Revenue Code Section 4481** -- A Heavy Vehicle Use Tax applies to all highway motor vehicles, including buses, which have a taxable gross weight of 55,000 pounds or more, including trucks or buses with a base registration in Mexico and Canada. The rate imposed on Mexican and Canadian vehicles is 75 percent of the rate applicable to U.S.-based vehicles.

The amount of tax imposed depends on the weight of the vehicle. For Mexican and Canadian vehicles, a rate of $75.00 per year applies to a vehicle weighing 55,000 pounds. Heavier vehicles are subject to higher rates. Vehicles weighing more than 75,000 pounds pay a maximum rate of $412.50 a year. The tax year starts July 1 of any given year and ends the following June 30.

**Form 2290, Heavy Vehicle Use Tax Return,** is used to report the tax and is due August 31 of each year. For vehicles placed in service after the start of the tax year, separate Forms 2290 must be filed for each month that a vehicle is first used on a U.S. public highway. Any tax due will be calculated as a partial year amount.

All companies with U.S. filing requirements are required to have an **Employer Identification Number (EIN),** which can easily be obtained by submitting a completed form SS-4, Application for Employer Identification Number, to the Internal Revenue Service.

A tax return must be filed with the IRS if a vehicle has any U.S. mileage. Vehicles traveling 5,000 miles or less on U.S. roads for the year have no tax due, but are reported on Form 2290 as "suspended vehicles." Trucks and buses exceeding 5,000 miles are reported on Form 2290 as taxable vehicles.

Whenever a Form 2290 is filed, the IRS sends the taxpayer a Form 2290, Schedule 1, receipt. Mexican and Canadian trucks and buses entering the United States that are subject to Heavy Vehicle Use Tax requirements are strongly advised to carry this receipt with them to avoid possible delays or denial of entry into the United States.

Tax forms and other assistance with the Heavy Vehicle Use Tax are available by calling, writing, or visiting the IRS office in Mexico City:

Internal Revenue Service
U.S. Embassy
Avenida Reforma #305
Colonia Cuahtemoc,
06500 Mexico, D.F.
Telephone Number: (915) 211-0042; Extension 3557 or 3559

The form 2290 can be downloaded from the following Internet website:
http://www.irs.gov/formspubs/display/0,,i1%3D50&genericId%3D10204,00.html

Tax forms and other assistance with the Heavy Vehicle Use Tax are also available at the following locations:

Internal Revenue Service
5835 Callaghan Road
San Antonio, Texas 78228
Contact: Art Salazar
Telephone: (210) 706-5480
Fax number: (210) 706-5394

Internal Revenue Service
A/C International
950 L'Enfant Plaza South
Washington, D.C. 20024
CP:IN:D:C:655
Contact: Jeffrey Arre
Telephone number: (540) 720-3725 Mon., Wed., Fri.; (202)-874-1546 Tues., Thurs.
Fax number: (202) 874-1808

Internal Revenue Service
A/C Examination
1111 Constitution Avenue
Washington, D.C. 20224
Contact: Carole Sheets
Telephone number: (814) 533-4211 or (202) 622-5521
Fax number: (814) 533-4212 or (202) 622-5407

# EMISSIONS REQUIREMENTS

The Environmental Protection Agency (EPA) sets emissions requirements for trucks that are met at the manufacturer level. The EPA also sets standards for fuels. These standards are the responsibility of those who refine and sell the fuel.

Drivers should be aware that individual States can set their own emissions requirements and frequently inspect for them. For further information check individual State websites. These can be accessed from EPA's website at **http://www.epa.gov/air/partners.html#state.**

## THE AMERICANS WITH DISABILITIES ACT REQUIREMENTS

The Americans with Disabilities Act (ADA), Public Law 101-336, provides comprehensive civil rights protections to individuals with disabilities in the areas of employment, public accommodations, government services, and telecommunications. Title III of the ADA prohibits discrimination on the basis of disability by private entities, e.g., Over-The-Road-Buses (OTRB) in places of public accommodations. The U.S. Department of Transportation regulations 49 CFR, Part 37 require accessible OTRB service for individuals with disabilities and new OTRB's to be equipped with wheelchair lifts. The regulations apply to intercity and other fixed-route bus operators and to charter and tour operators. The regulations are applicable to Canadian and Mexican buses that bring in and drop off passengers in the United States, and pick up and take passengers from the United States to Canada or Mexico. The regulations further require bus companies to submit information reporting ridership and the acquisition of buses to the Federal Motor Carrier Safety Administration.